KONTASET
ANNO 1919

Rack Enclosures Catalogue



KONTASET VÁZSZERKEZET GYÁRTÓ ÉS SZOLGÁLTATÓ KFT.
1095 Budapest, Soroksári út 138-142.
6600 Szentes, Csongrádi út 1. Telefon: + 36 63 314 407, +36 63 561 110
E-mail: info@kontaset.hu ● Internet: www.kontaset.hu

KONTASET – Custom Solutions Tailored to Your Needs

Since 1990, **KONTASET Vázszerkezet Gyártó és Szolgáltató Kft.** has been providing reliable, bespoke solutions in the fields of network distribution units, rack and server enclosures, cold aisle containments, technical furniture, and high-precision sheet metal fabrication.

At our facilities in **Szentes and Budapest**, nearly 100 dedicated professionals work to ensure our clients always receive the highest quality and most cost-effective solutions.

With extensive manufacturing capacity and a modern machinery park, we offer flexibility in both custom (bespoke) projects and mass production. We provide end-to-end solutions, encompassing everything from injection molding, sheet metal and profile processing, and powder coating to complete electrical assembly. Our experienced design and commercial teams assist in finding the most economical approach, supporting our partners throughout the entire process—from initial design to final delivery and installation.

Our goal is to ensure that every product represents the highest standard of quality and provides long-term value to our clients.








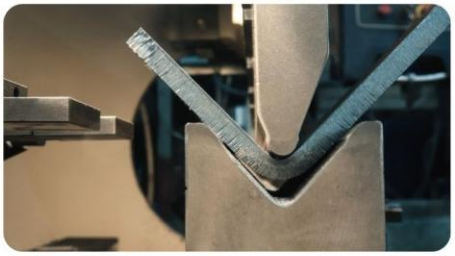




Table of Contents

MAIN CATEGORIES	TYPE	PAGE
19” Rack Enclosures	KS 300 Series Rack Enclosures	1
	Optional Components and Accessories	2-3
Server Rack – KS 350 & KS 550 Series	KS 350	4
	Design and Rapid Assembly	5
	Technical Specifications	6
	KS 550	7-8
Server Rack Accessories	KS350 / 550 Accessories	9-11
	Cold Aisle Containment Systems	12-13
19” Wall-Mounted Enclosures	Type F1 – Single-Section Wall-Mounted Enclosure Available Depths: 400 mm and 600 mm	14
	Type F3 – Single-Section Wall-Mounted Enclosure Available Depth: 480 mm	15
	Type F4 – Double-Section (Swing-Out) Wall-Mounted Enclosure Available Depth: 480 mm	16
19” Accessories and Power Distribution Units (PDUs)	19“ Accessories	17-19
	19“ Accessories and PDUs	20-21
19” Open Frame Racks	Frame racks	22
Custom-Built and Bespoke Enclosures	Battery Enclosures and Racks	23
Outdoor Enclosures	Outdoor Enclosures	24
	Outdoor Wall-Mounted Enclosures	25-26
	Outdoor Free-Standing Rack Cabinet	27-28



The enclosure is engineered for maximum stability and durability, featuring a high-precision manufacturing process: The main cabinet frame is constructed from **1.5 mm thick, cold-rolled steel**, featuring a multi-bend profile and a fully welded design for superior structural integrity. The 19” mounting profiles (rails) are securely fixed to internal support brackets that are welded directly into the frame structure. The lockable rear and side panels are made of 1.0 mm steel sheet and are fully removable, providing easy 360-degree access during installation and maintenance. Equipped with a swing-handle lock, the door features a 180° opening angle. While the default hinge position is on the right side, the door is fully reversible, allowing for left-hand opening if required. The enclosure is capped with **1.5 mm thick steel plates** securely fastened to the frame with screws. Both the top and bottom plates include dedicated cable entry ports, each protected by **three individual screw-on cover plates**. All metallic components of the enclosure are interconnected via a **centralized grounding system**. The main earthing point is an **M6 threaded stud** located at the center of the upper steel frame.

Feature Description

Color: RAL 7035 Light Grey (Electrostatic powder coating)

Climate ResistanceStandard indoor environment

Ingress Protection IP20 rated (Protection against solid objects >12mm)

Load Capacity Max. 3,000 N static load (Approx. 300 kg)

CATALOG SELECTION

Model Type	Order No.	Dimensions				Weight *[kg]*
		H1	**H**	**B**	**T**	
KS 300-22-6060	1.718.3201	22U	1150	600	600	56
KS 300-24-6060	1.718.3202	24U	1240	600	600	59
KS 300-28-6060	1.718.3203	28U	1420	600	600	66
KS 300-32-6060	1.718.3204	32U	1600	600	600	72
KS 300-36-6060	1.718.3205	36U	1780	600	600	79
KS 300-40-6060	1.718.3206	40U	1950	600	600	85
KS 300-42-6060	1.718.3207	42U	2040	600	600	88
KS 300-45-6060	1.718.3208	45U	2180	600	600	93
KS 300-53-6060	1.718.3209	53U	2530	600	600	106
KS 300-32-6080	1.718.3210	32U	1600	600	800	79
KS 300-36-6080	1.718.3211	36U	1780	600	800	86
KS 300-42-6080	1.718.3212	42U	2040	600	800	96
KS 300-45-6080	1.718.3213	45U	2180	600	800	101
KS 300-32-8060	1.718.3214	32U	1600	800	600	77
KS 300-36-8060	1.718.3215	36U	1780	800	600	83
KS 300-42-8060	1.718.3216	42U	2040	800	600	93
KS 300-45-8060	1.718.3217	45U	2180	800	600	99
KS 300-32-8080	1.718.3218	32U	1600	800	800	91
KS 300-36-8080	1.718.3219	36U	1780	800	800	99
KS 300-42-8080	1.718.3220	42U	2040	800	800	111
KS 300-45-8080	1.718.3221	45U	2180	800	800	116

1U=1¾"=44,45 mm • 19"=482,6 mm

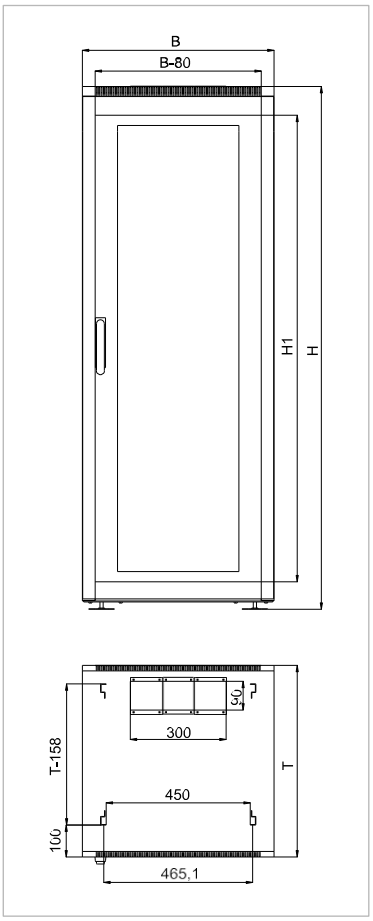

The KS300 series enclosures can be ordered in heights differing from the standard catalog sizes, in versions equipped with metric-pitch mounting rails in compliance with the ETS 300.119 standard, as well as in custom colors other than the standard RAL 7035 light grey.

Lifting frame

- The lifting frame features cable entry ports on all sides covered with screw-on cover plates.
- It is designed to accommodate the leveling feet or castor sets provided with the enclosure.
- Manufactured from 1.5 mm and 3 mm thick steel sheet in RAL 7035 color.
- Lifting frames are also available with perforated side walls on all four sides upon request.

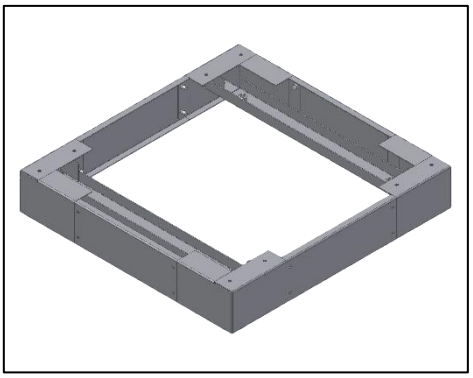

TECHNICAL DATA TABLE

Dimensions			Order No.
Width **[B]**	*Depth* **[T]**	*Height* **[H]**	
600	600	100	2.718.0114
600	800	100	2.718.0115
800	600	100	2.718.0116
800	800	100	2.718.0117

Fan Tray Panel

Designed for integration into the top cover, this fan tray panel leaves the cabinet's full n x U usable mounting height completely unobstructed. The panels come equipped with a power switch, a fuse, and a 1.5 m power cable. The integrated ball-bearing fans feature the following specifications:

- Operating Voltage: 230 V AC
- Noise Level: 37 dB
- Power Consumption: 15 W per fan
- Airflow: 117 m3/h per fan
- Operating Temperature Range: -20°C to +70°C
- Fan tray panels are also available with 48 V DC fans upon request
- .Material: 1.5 mm thick steel sheet;
- Color: RAL 7035.

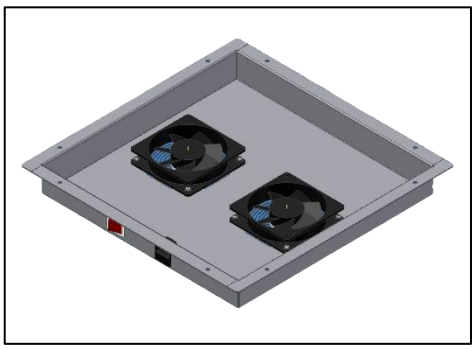

TECHNICAL DATA TABLE

Dimensions			Note	Order No.
Width **[B]**	*Depth* **[T]**	*Height* **[H]**		
400	400	50	2 db ventillátorral	2.710.3463
400	400	50	4 db ventillátorral	2.710.3159
400	600	50	6 db ventillátorral*	2.710.4306

Doors		**Panels**	
Front Door • with plexiglass insert • solid steel panel • perforated steel panel • 3-point locking system	**Rear Door** • with plexiglass insert • solid steel panel • perforated steel panel • 3-point locking system	**Rear Panel** • perforated steel surface • louvered surface (top or bottom)	**Side Panels** • perforated steel surface • louvered surface (top or bottom) **Top Cover** • perforated steel surface

Castor Set

- The castor set can be installed in place of the leveling feet.
- The set includes 4 castors, 8 M10 nuts, and 8 M10 washers.
- For enclosures equipped with a **lifting frame**, 4 swivel castors are recommended.
- For enclosures **without a lifting frame**, a combination of 2 swivel castors and 2 braked swivel castors is recommended.
- The 75 mm castors increase the overall height of the cabinet by 85 mm.
- **Load capacity:** 60 kg per castor.

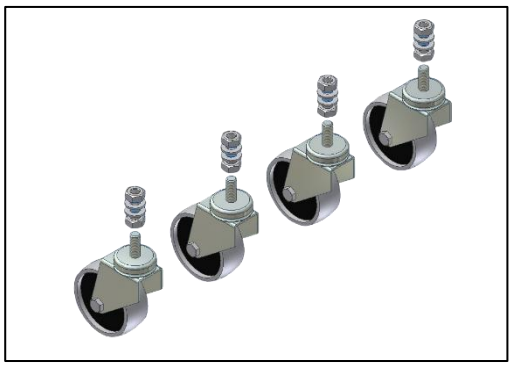

TECHNICAL DATA TABLE Note	Order No.
4 swivel castors	2.718.1001
2 swivel castors and 2 braked swivel castors	2.718.1002

Earthing Bar Set

The plastic spacers included in the set are designed to be mounted onto the depth-stay rails of the enclosures.
The set includes:

- Insulating plastic spacers 1 x Copper bar with a 6 mm}x6 mm cross-section
- Terminal clamps (the quantity is specified in the table)
- Fasteners for cabinet installation 1 x 2.5 mm² green/yellow wire for connection to the central earthing point
- Wire compatibility: The terminal clamps accept ferruled wires with a cross-section between 1.5 – 4.0 mm².

TECHNICAL DATA TABLE Dimensions	Notes	Order No.
Height **[H]**	*Number of terminal clamps*	
22U	5 db	2.718.0122
24U	6 db	2.718.0124
28U	7 db	2.718.0128
32U	8 db	2.718.0132
36U	9 db	2.718.0136
37U	9 db	2.718.0137
40U	10 db	2.718.0140
42U	10 db	2.718.0142
44U	11 db	2.718.0144
45U	11 db	2.718.0145
46U	11 db	2.718.0146
53U	13 db	2.718.0153
54U	13 db	2.718.0154

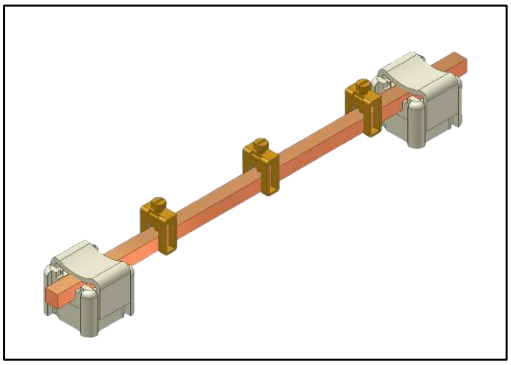

The **KONTASET KS350 server cabinet** is primarily designed for data center applications. While the standard configuration offers numerous advantages, fully customized versions are also available. The key benefits of the KS350 that make it exceptionally suitable for its purpose are:

- 48U internal height with a total external height of 2200 mm
- 1000 – 1200 mm depth
- 1500 kg static load capacity
- Perforated doors with 80% airflow efficiency



It offers a generous internal space relative to its external dimensions, allowing for more equipment to be housed in a single server cabinet. With an external height of 2200 mm, it provides a full 48U of internal mounting capacity.



You can safely install heavy equipment as well, as the frame of the KS350 is made of specially bent and welded steel sheets. This construction is extremely robust, providing a static load capacity of 1,500 kg.



You don’t have to worry about the cooling of your installed devices either, as the perforated doors feature a high, 80% airflow efficiency.







The top cover features flexible cable entry panels with knock-out openings, allowing for the subsequent installation of roof fan units.



PDUs can be installed vertically across the full height of the server cabinet, or horizontally in cabinets wider than 600 mm.



Installation of the server cabinets is significantly faster thanks to the leveling feet, which can be adjusted from the inside. This solution provides substantial time savings and higher precision, especially when installing long rows of cabinets, as adjustments can be finalized immediately using a spirit level.



Thanks to the infinitely adjustable mounting rails, KS350 server cabinets can be easily tailored to the specific equipment being installed.



Mounting rails with integrated Unit (U) markings simplify and accelerate installation. This helps avoid mounting errors, which could otherwise significantly increase assembly time.



Every KS350 server cabinet is supplied with a tool that can be mounted on the door, allowing for the easy installation of cage nuts.

The panels provide easy access to the contents of the server cabinet. The doors feature a 110-degree opening angle and a reversible opening direction. User convenience is guaranteed by the EMKA handle mechanism, while the side panels can be easily removed, even by a single person.

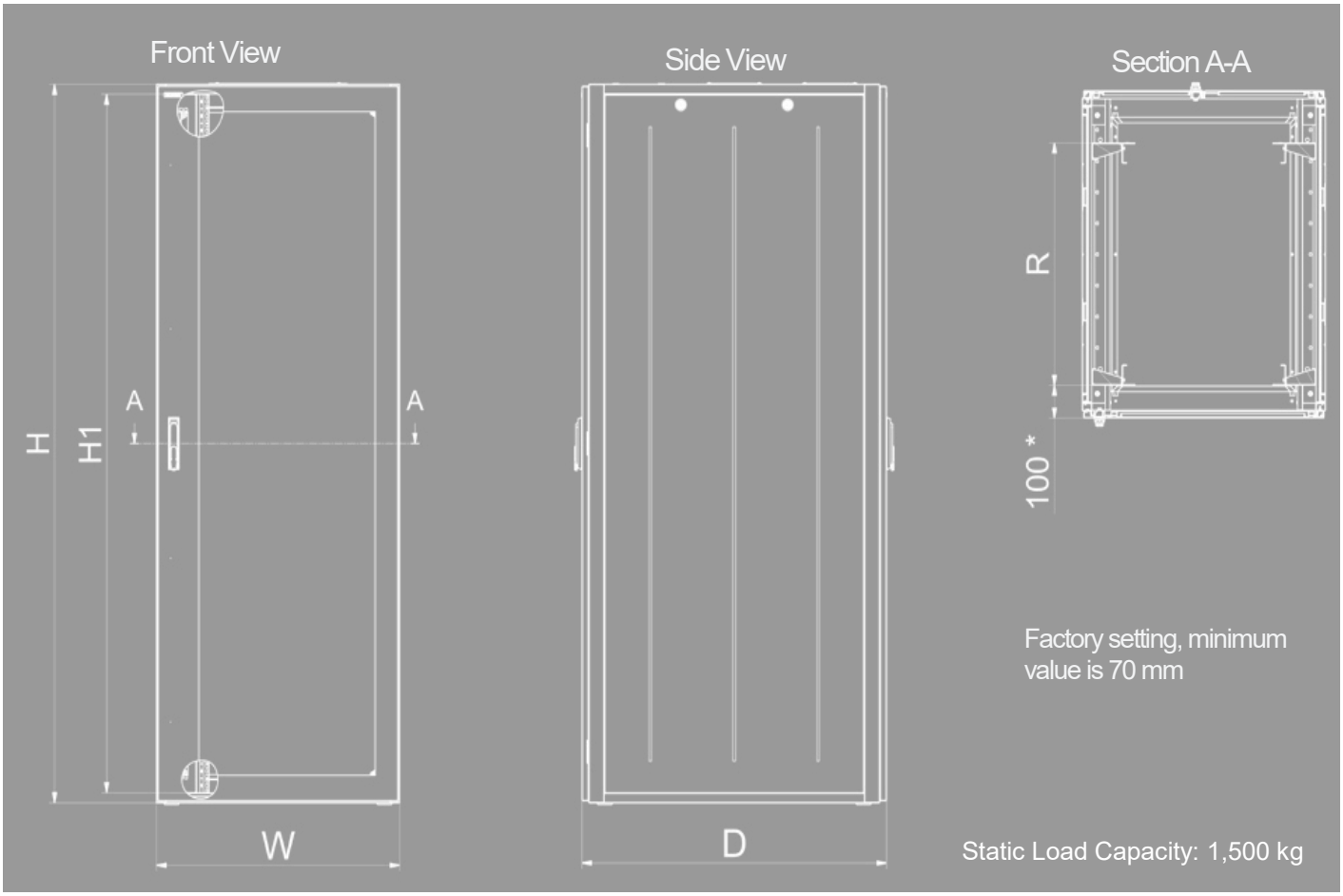

Standard Compliance
EIA-310-E (19" rack standard)

Environmental Compliance:
RoHS Directive compliant,
REACH Regulation compliant

Material and Surface Treatment

Structure: Welded steel frame construction.
Surface Treatment: Powder-coated finish.
Color: RAL 7021 (standard black grey).
Options: Custom colors are available upon request.

Technical Data Table Order No.	H1 Unit	W Width (external, mm)	D Depth, (external, mm)	H Height (external, mm)	R Distance between mounting rails (mm)	Usable Internal Depth (mm)	Weight (kg)
1.718.6001	42	600	1000	1928	140-860	940	116
1.718.6002	48	600	1000	2195	140-860	940	133
1.718.6004	42	800	1000	1928	140-860	940	136
1.718.6005	48	800	1000	2195	140-860	940	155
1.718.6007	42	600	1200	1928	140-1060	1140	140
1.718.6008	48	600	1200	2195	140-1060	1140	159
1.718.6010	42	800	1200	1928	140-1060	1140	163
1.718.6011	48	800	1200	2195	140-1060	1140	186

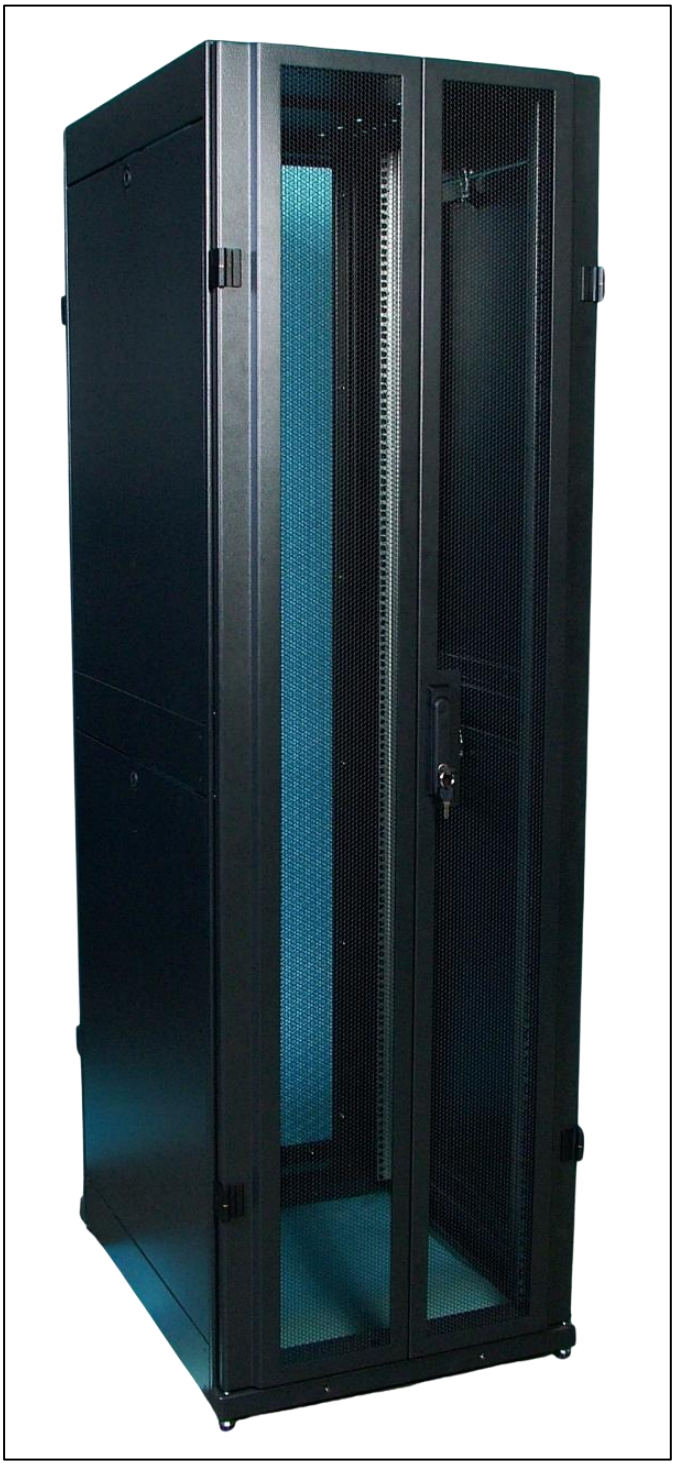

Key Features:

- **Easy Transport and Installation:** The **flat-pack design** ensures cost-effective shipping and simple on-site assembly.
- **Modular Construction:** A **future-proof design** allows components to be freely configured and upgraded, ensuring your system remains up-to-date.
- **Full Customization:**
  - **Components:** Choose from a wide range of custom doors, side panels, and top covers.
  - **Mobility:** Castor load capacity can be tailored to the weight of the installed equipment.
  - **Security:** Locking options ranging from standard locks to high-security solutions.
- **Robust and Cost-Effective Structure:** An optimal combination of **welded and riveted joints** guarantees massive stability and excellent value for money.
- **Rapid Equipment Deployment: Infinitely adjustable** mounting rails allow for quick and precise positioning of servers and networking gear.
- **Intelligent and Secure Earthing:** Earthing points are installed after the coating process only where strictly necessary—providing cost-efficient and reliable electrical protection **without redundant cabling**.

Optional Solutions

- **Doors:** Available in **perforated** (for high airflow) or **glass** variants.
- **Side Panels:** Choose between **solid** (closed) or **perforated** designs.
- **Top Covers:** Options include **ventilation grilles**, integrated **fan units**, or **solid** panels.
- **Castors:** Heavy-duty wheels for easy mobility and positioning.

Accessories

- **Shelves & Slide Rails**: Fixed or telescopic options for non-rackable equipment.
- **Cable Management**: A wide range of cable organizers and cable management arms.
- **Fan Units:** Roof-mounted or rack-mounted cooling solutions.
- **Blanking Panels & Patch Panels**: Blanking plates for airflow control and various cable management front panels.
- **Cold Aisle Containment**: Specialized elements for efficient data center thermal management.
- **Custom Solutions:** Bespoke designs and tailored configurations are available upon request.

Additional Features
PDU Cable Management Kit: Included as standard for organized power distribution.
Color: RAL 7021 (Fine-textured black grey).

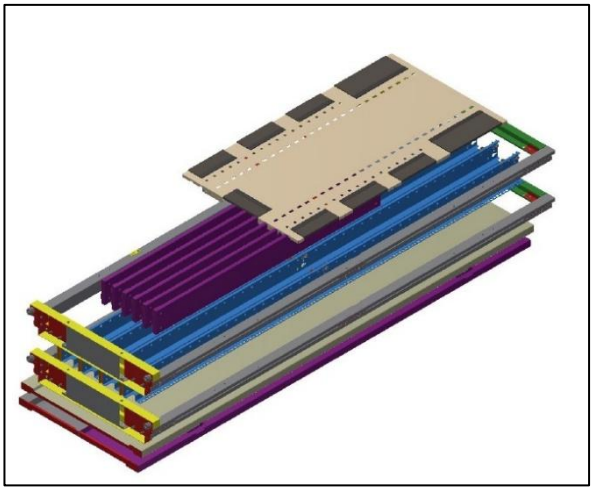

Flat-pack construction for easy transport.

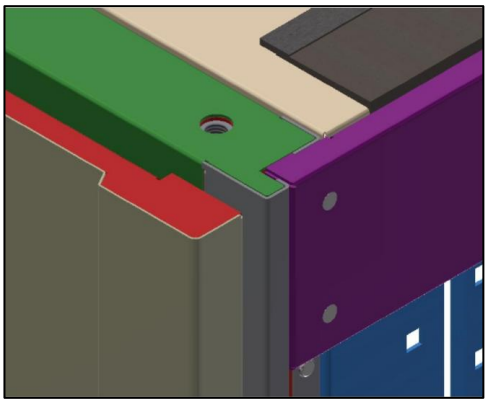

An optimal, cost-effective combination of welding and riveting.

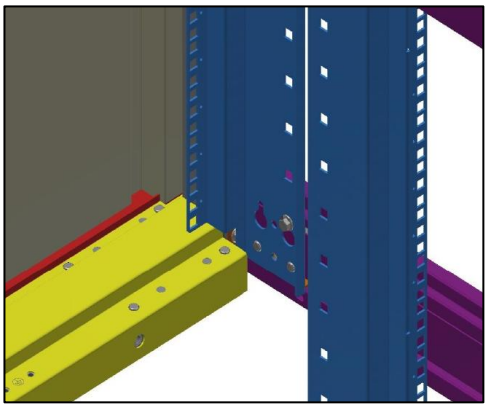

Infinitely and easily adjustable mounting rails

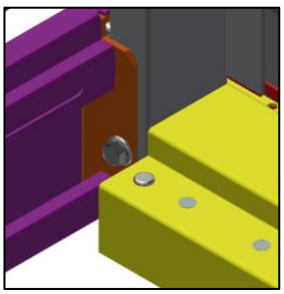

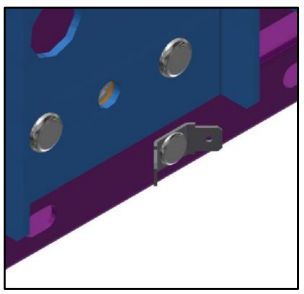

Earthing points can be riveted according to the specific configuration.

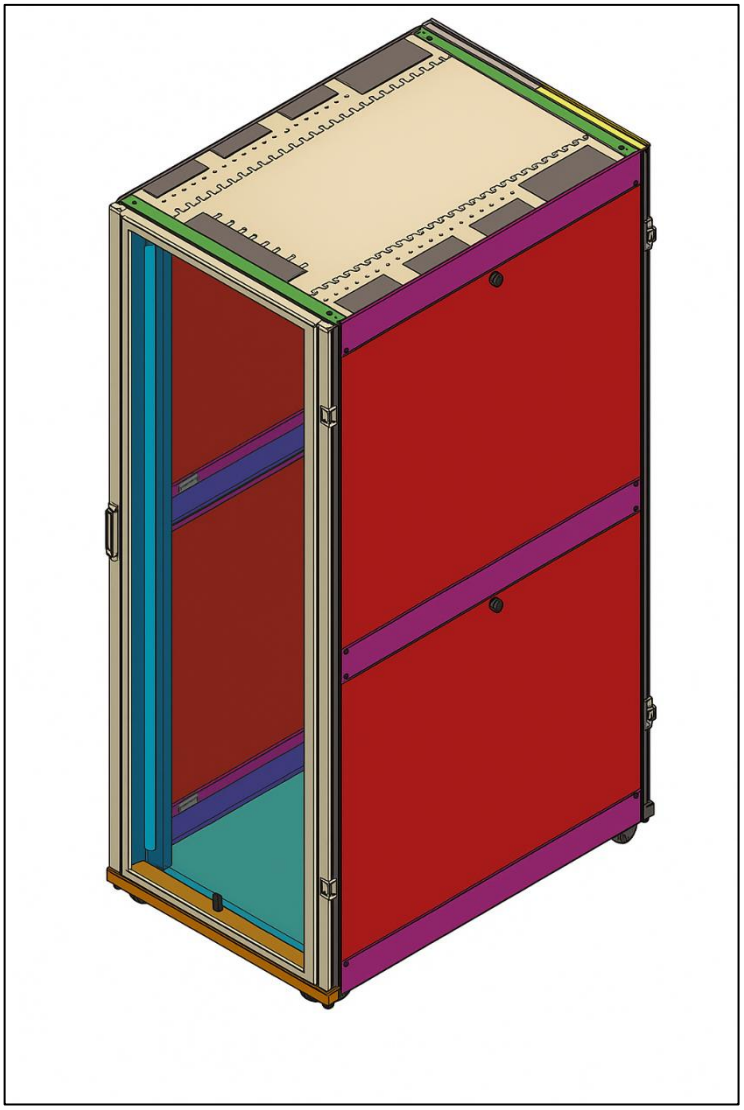

Technical Data Table

Order No.	Dimensions		
	Height	Width	*Depth*
1.716.3031	36U	600	600
1.716.3032	42U	600	600
1.716.3033	48U	600	800
1.716.3034	36U	600	800
1.716.3035	42U	600	800
1.716.3036	48U	600	800
1.716.1370	42U	600	1200
1.716.1372	42U	600	800
1.716.1390	48U	800	1200
1.716.1395	48U	600	1200

We offer a wide range of additional accessories for the KS350 and KS550 server cabinets, which can be ordered separately or tailored to meet unique requirements. The right accessories not only enhance the cabinet's functionality but also significantly improve system security, cooling efficiency, and ease of maintenance. From cable management and ventilation solutions to specialized mounting and shelving systems, numerous options are available, allowing you to build the configuration that best fits your specific operating environment. Our goal is to ensure that our server cabinets provide a reliable and efficient long-term foundation for your business's IT infrastructure.

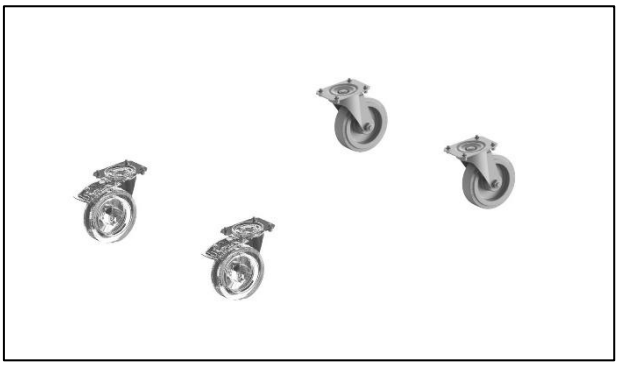

87183250: Castor set: 2 fixed and 2 swivel wheels

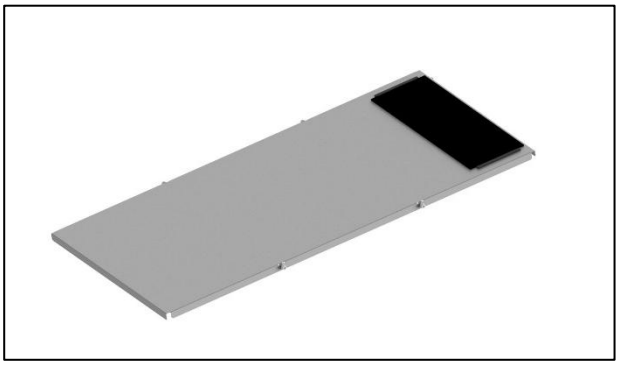

87183579: Bottom Gland Plate: Solid or with Brush Cable Entry

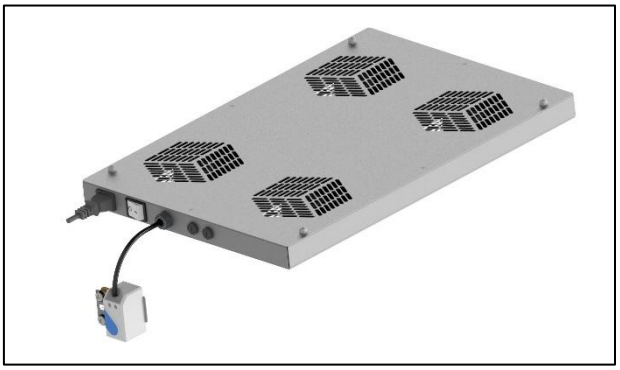



87183428: Thermostat-Controlled Fan Tray

- Integrated Thermostat: Automatically regulates cooling based on internal temperature.
- Space-Saving Design: Directly mounts to the underside of the top cover, consuming zero internal rack units (U space).
- Scalable Cooling: Available in both 4-fan and 6-fan configurations to suit different heat loads.

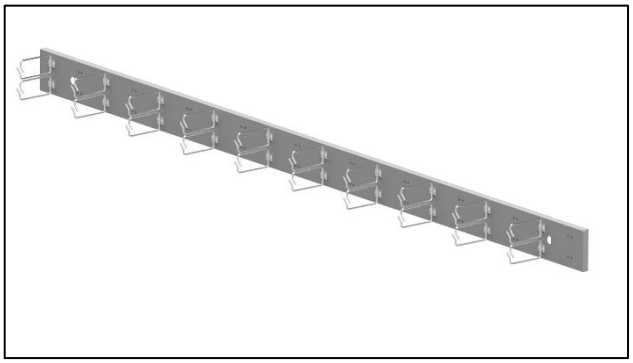

87183318: Vertical Double-Ring Metal Cable Manager

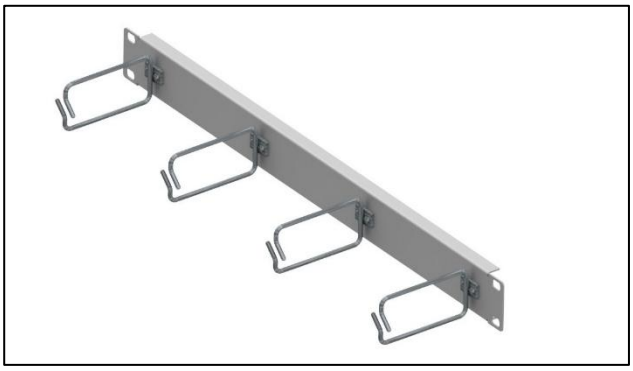

87104082: 1U Metal Ring Cable Management Panel

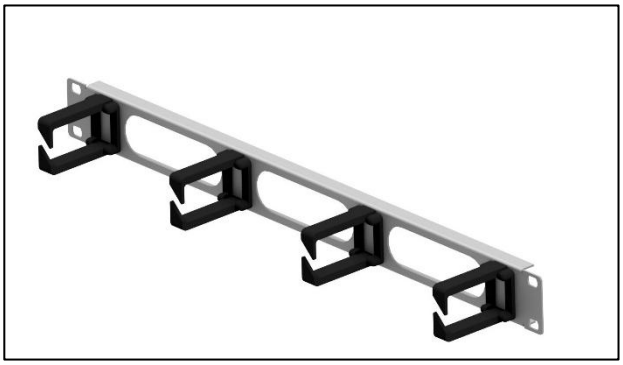

87180173: 1U Cable Management Panel with Plastic Rings and Cut-outs

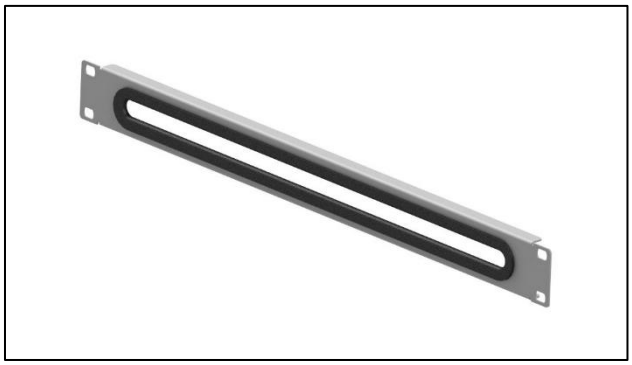

87104186: 1U Cable Pass-through Panel with Edge Protection

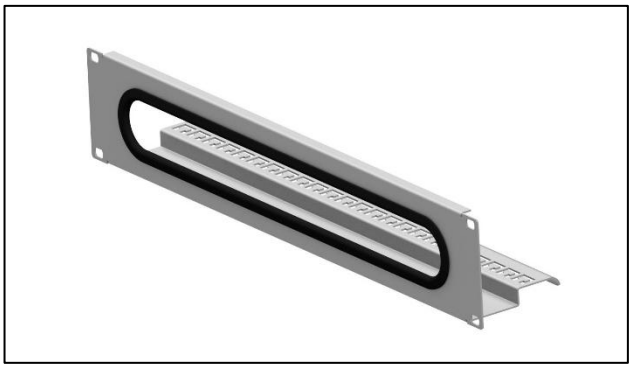

87180175: 2U Cable Pass-through Panel with Edge Protection and Rear Cable Tie Points

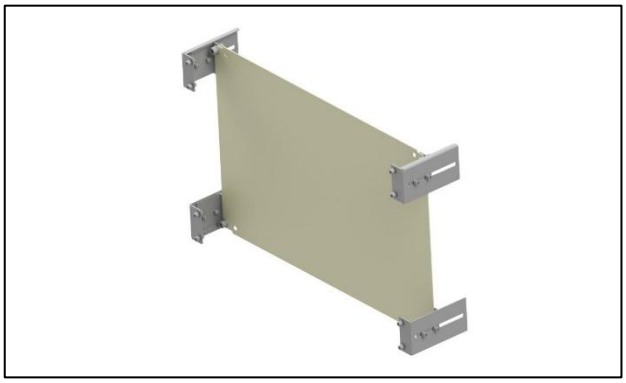

27152564: 19-inch Rack-Mountable Mounting Plate Support Kit (Custom sizes available; mounting plate sold separately)
37156868: 350 mm height,
37156869: 550 mm height.
Custom dimensions are available upon request to fit your specific equipment needs.

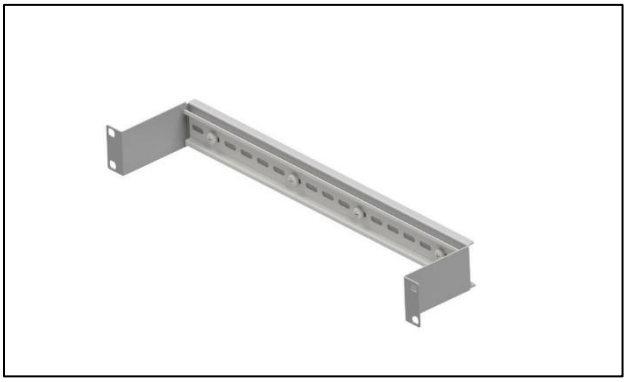

27152755: 19-inch Rack-Mountable Recessed DIN Rail Panel

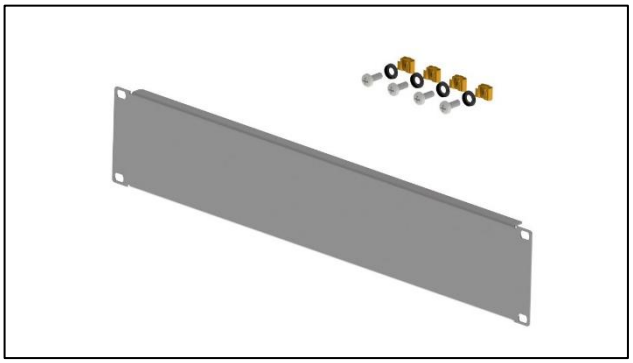

87104315: Blanking Panel with Screw Kit (Available from 1U to 10U; custom instrument cut-outs available upon request)

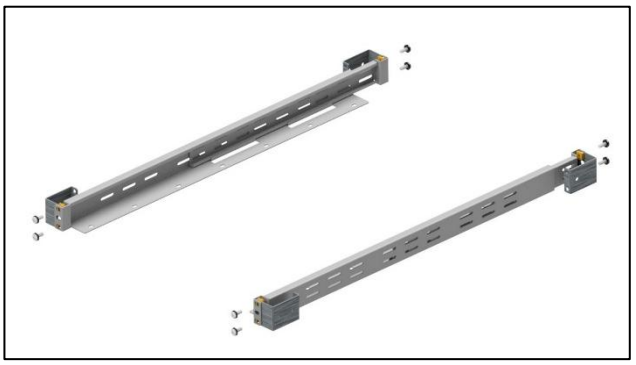

87183025: Adjustable Drawer Support Rail

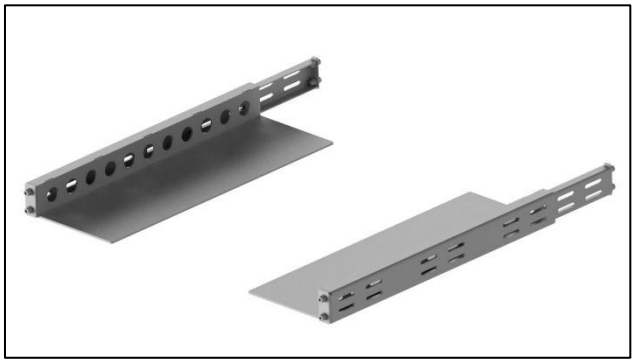

87183983: Galvanized Adjustable Drawer Support Rail

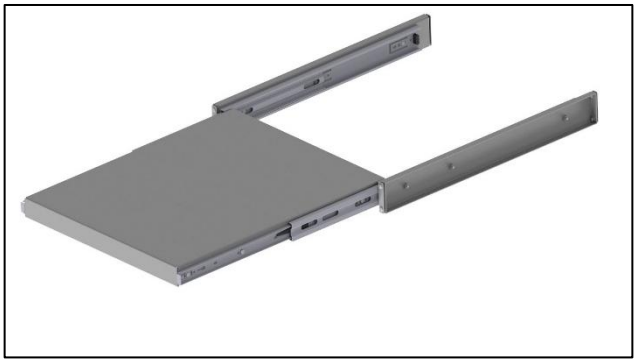

87184000: Sliding Shelf with Telescopic Rails

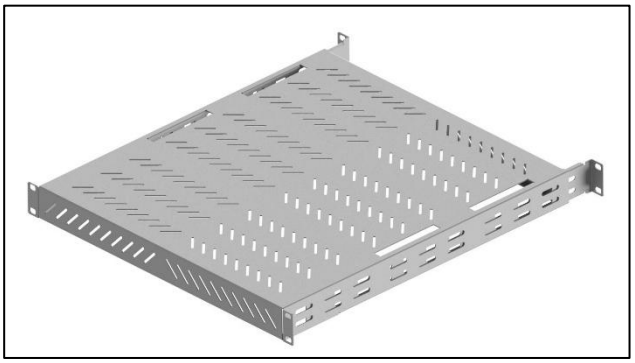

87183262: Adjustable Perforated Shelf

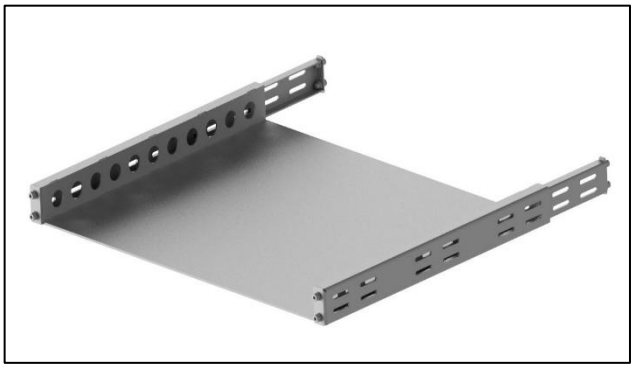

87184051: Galvanized Adjustable Shelf

Thanks to the flexible and modular design of the KS 350 and 550 cabinet series, they provide an ideal solution for Cold Aisle Containment.
These cabinets can be easily integrated into existing systems, and with a wide range of sizes and configurations, they are fully customizable to meet specific data center requirements. Support for energy-efficient cooling solutions not only reduces operational costs (OPEX) but also significantly enhances overall system reliability.





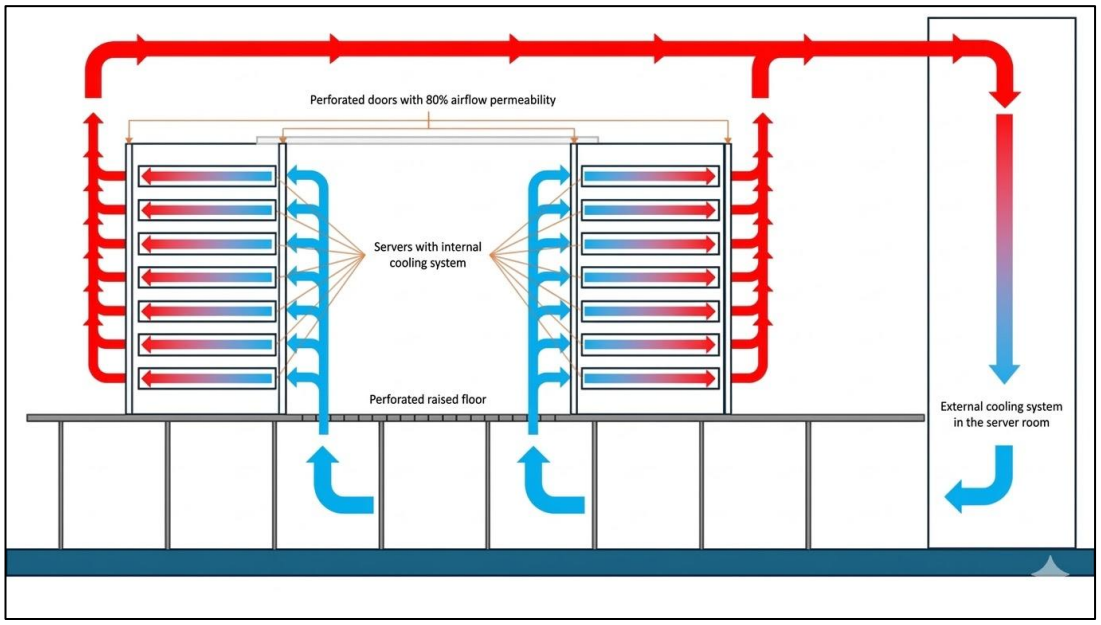

Cold Aisle Airflow Management

Cooling Principle
The hot air generated by the servers exits the cabinet on the outer side of the aisle, where it is channeled away by the facility's central cooling system. This configuration allows the servers' internal ventilation to operate optimally and without obstruction. Since the front and rear perforated doors provide **80% air permeability**, every server receives uniform and precise cooling from the available cold air supply.

Energy Savings
By utilizing regulated airflow that adapts to the specific cooling demands of the servers, combined with high-ventilation doors, **energy savings of up to 30%** can be achieved compared to alternative cooling methods.

Design and Illumination
The cold aisle is enclosed at both ends of the row with **sliding doors**, while the space between the two cabinet rows is covered by a **plexiglass roof**. This transparent roofing solution allows the facility's existing ambient lighting to illuminate the interior of the aisle effectively.

Flexibility and Custom Requirements

Consistent with all **KONTASET** products, our server cabinets are available in fully customized designs. Thanks to our expert engineering team, each product can be precisely tailored to the specific equipment and on-site conditions of your facility.

Custom Options:

- **Bottom plates** equipped with integrated cable pass-throughs.
- **Perforated side panels** and top covers for enhanced ventilation.
- Dedicated **cut-outs for fan units**.
- **Restricted access:** Both doors and side panels can be fitted with optional high-security locks.
- **Bespoke configurations:** Fully integrated units including pre-installed accessories.

Standard Compatibility

We provide solutions for all major industry standards, including **19", 21", ETS, and 23"** mounting profiles (the latter available for 800 mm wide cabinets).

Tailored Appearance

The aesthetic finish of our server cabinets is adapted to customer preferences. In addition to our standard colors (**RAL 7035 Light Grey, RAL 7021 Black-Grey, and RAL 9005 Black**), a wide range of custom colors is available upon request.





The cabinet features a single-piece, heavy-duty unibody shell for maximum structural integrity. The top and bottom plates are securely fastened to the shell with four screws each. Both the top and bottom plates include foam-lined cable entry points, preceded by integrated cable management and tie-down surfaces. The front door consists of a framed glass design, with a reversible opening direction to suit on-site requirements. The components are manufactured from high-quality 1 mm and 1.5 mm thick sheet steel. All structural elements of the cabinet are fully bonded (earthed); connection to the central earthing point is provided via an M6 threaded stud. The 400 mm deep models include two 19-inch mounting rails, while the 600 mm deep versions are equipped with four rails. These rails are depth-adjustable in 20 mm increments..

Technical Specifications
Color: RAL 7035 Light Grey (powder-coated finish).
Included Accessories:
Wall-mounting hardware kit (all necessary fasteners for installation).
Drilling template for accurate marking of the four required **10 mm diameter holes**.
Load Capacity:
Up to 9U height: 30 kg
From 12U height: 50 kg

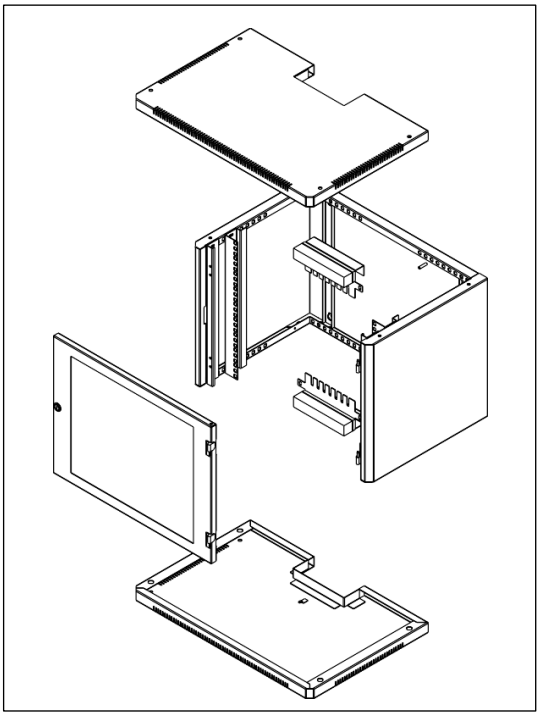

Optional Components (Ordered Separately):

- Solid or Perforated Steel
- Doors Perforated Bottom and Top Plates
- Top Plate with Integrated Dual-Fan Tray: *Available in 230V AC or 48V DC power configurations.*
- Metric Mounting Rail Kits

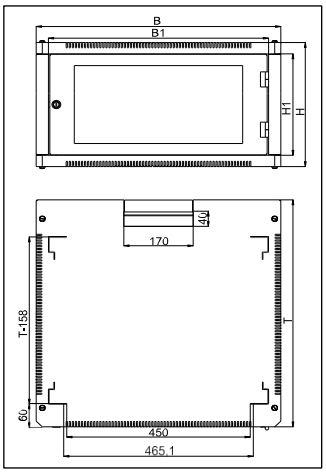

TECHNICAL DATA TABLE

Model Type	Order No.	Dimensions					Weight *[kg]*
		H1	**H**	**B**	**B1**	**T**	
F1-06-6040	1.716.1000 / 5	6U	328	600	540	400	20
F1-09-6040	1.716.1001 / 5	9U	462	600	540	400	22
F1-12-6040	1.716.1002 / 5	12U	596	600	540	400	28
F1-15-6040	1.716.1003 / 5	15U	729	600	540	400	32
F1-18-6040	1.716.1008 / 5	18U	862	600	540	400	36
F1-06-6060	1.716.1004	6U	328	600	540	600	24
F1-09-6060	1.716.1005	9U	462	600	540	600	29,3
F1-12-6060	1.716.1006	12U	596	600	540	600	34,5
F1-15-6060	1.716.1007	15U	729	600	540	600	39,7
F1-18-6060	1.716.1009	18U	862	600	540	600	44,5

F1-type wall-mounted cabinets are available in 6U, 9U, 12U, and 15U heights with a width of ½ 19" and a depth of 300 mm. Custom colors other than RAL 7035 are also available upon request.

1U=1¾"=44,45 mm
19"=482,6 mm

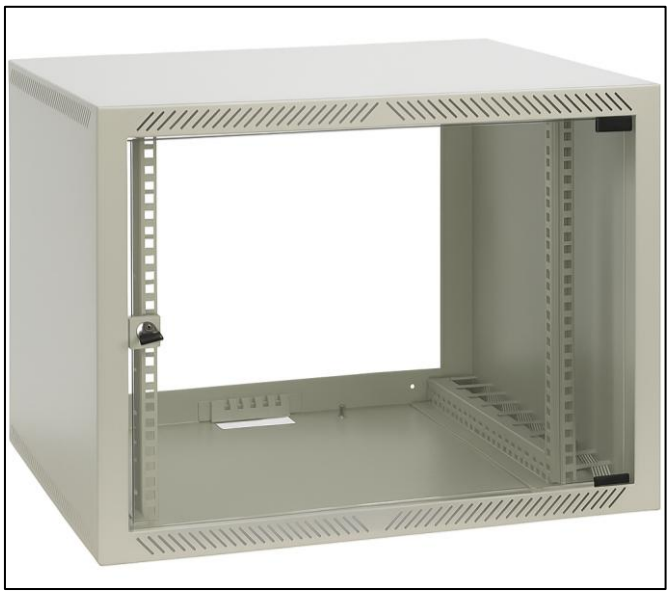

The cabinet features a robust, unibody construction made from bent and welded sheet steel, with material thicknesses of 1 mm and 1.5 mm. The bottom panel is equipped with cable entry points, accompanied by integrated surfaces designed for cable management and tie-down. The door features a frameless glass design with a reversible opening direction to accommodate on-site requirements. All structural components of the cabinet are fully bonded (earthed), and connection to the central earthing point is provided via an M6 threaded stud. The 6U and 9U models are equipped with two 19-inch mounting rails, while the 12U version includes four rails. These rails are depth-adjustable in 20 mm increments.

Technical Specifications
Color: RAL 7035 Light Grey (powder-coated).
Included Accessories:
Wall-mounting hardware kit (all necessary fasteners).
Drilling template for 4x 10 mm diameter holes.
Load Capacity: Up to 12U height: 20 kg

TECHNICAL DATA TABLE

Model Type	Order No.	Dimensions					Weight *[kg]*
		H1	**H**	**B**	**B1**	**T**	
F3-06-6048	1.716.1300	6U	328	600	540	480	14,7
F3-09-6048	1.716.1301	9U	462	600	540	480	16,5
F3-12-6048	1.716.1302	12U	596	600	540	480	20,3

Wall-mounted cabinets are also available in custom colors other than RAL 7035.

1U=1¾"=44,45 mm • 19"=482,6 mm

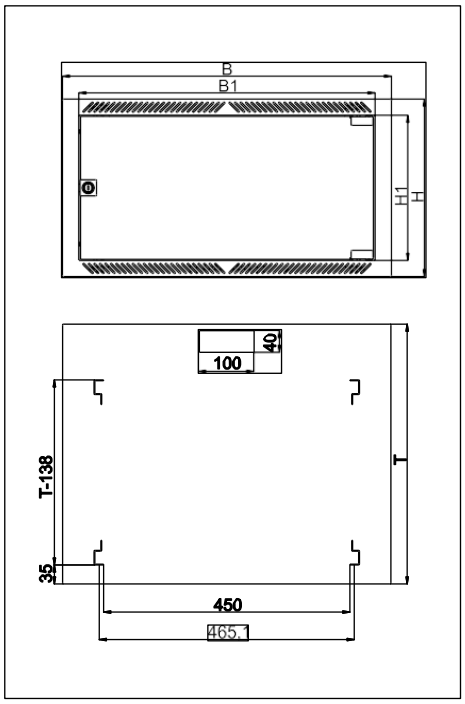

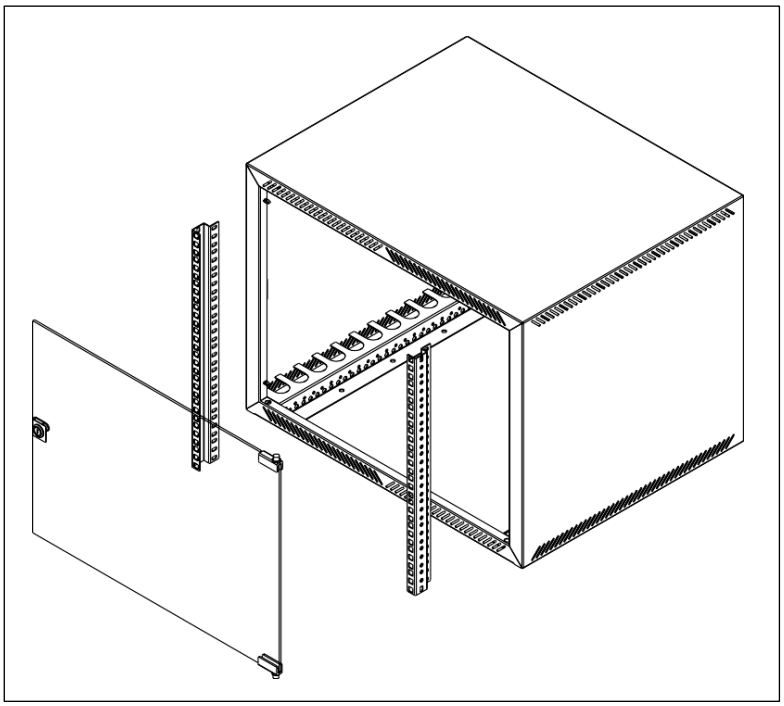



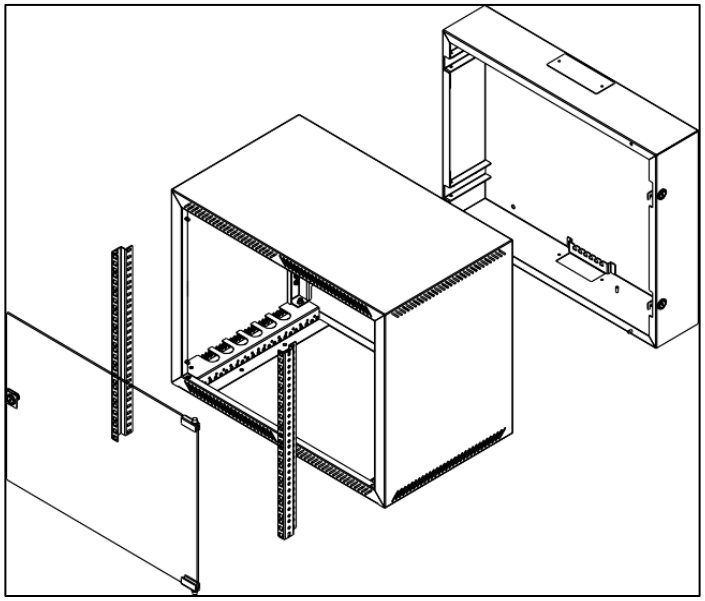

The cabinet features a 120 mm deep fixed rear section for wall mounting. The swing-out section is a robust, unibody construction made of bent and welded sheet steel, equipped with a glass door. Both the top and bottom panels include cable entry points sealed with screw-on cover plates. Integrated surfaces for cable management and strain relief are provided adjacent to these entries. The 6U and 9U models feature a frameless glass door, while the 12U, 15U, and 18U versions are equipped with a framed glass-insert door. The door opening direction is reversible as needed. All components are manufactured from 1 mm and 1.5 mm thick sheet steel. Every structural element is fully bonded (earthed), with a central earthing point provided via an M6 threaded stud. The 6U and 9U models include two 19-inch mounting rails, while the 12U, 15U, and 18U versions are equipped with four rails. These rails are depth-adjustable in 20 mm increments.

Technical Specifications
Color: RAL 7035 Light Grey (powder-coated).
Included Accessories:
Wall-mounting hardware kit (all necessary fasteners).
Drilling template for marking the four 10 mm diameter holes.
Load Capacity:
Up to 12U height: 20 kg
From 15U height: 40 kg

Wall-mounted cabinets are also available in custom colors other than RAL 7035.

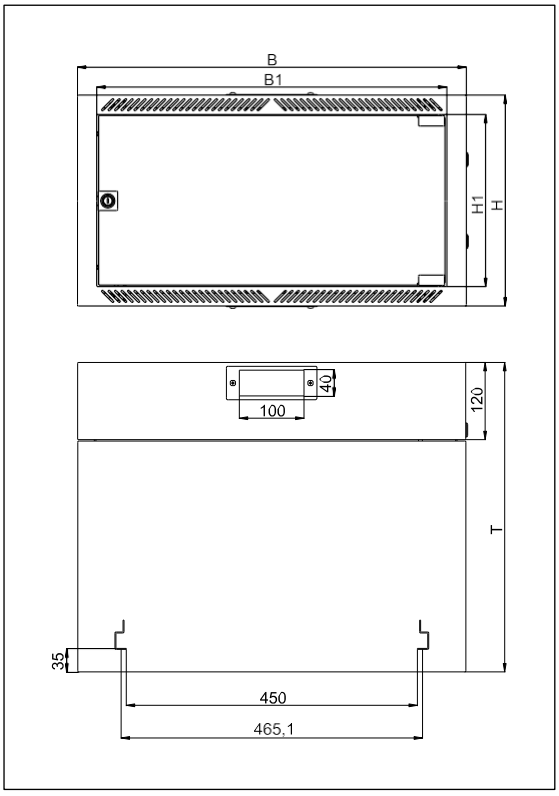

1U=1¾"=44,45 mm • 19"=482,6 mm

TECHNICAL DATA TABLE

Model Type	Order No.	Dimensions					Weight *[kg]*
		H1	**H**	**B**	**B1**	**T**	
F4-06-6036	1.716.1303	6U	328	600	540	360	14,3
F4-09-6048	1.716.1304	9U	462	600	540	480	20,2
F4-12-6048	1.716.1305	12U	596	600	540	480	26,9
F4-15-6048	1.716.1306	15U	729	600	540	480	30,9
F4-18-6048	1.716.1307	18U	862	600	540	480	35,4

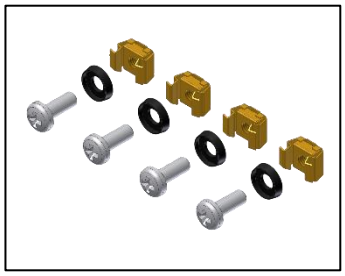

Rack Mounting Hardware Kit

For front-side mounting of 19" blank panels and equipment.
The kit includes:

- 4x M6 x 16 mm screws
- 4x M6 cage nuts

(suitable for 1.5 mm thick mounting rails)

- 4x plastic washers

Notes	Order No.
Supplied in a Polyethylene (PE) Bag	2.710.2190

Dimensions		Order No.
Width **[B]**	*Height* **[H]**	
19"	1U	2.710.4314
19"	2U	2.710.4315
19"	3U	2.710.4316
19"	4U	2.710.4317
19"	5U	2.710.4318
19"	6U	2.710.4319

Blank Panels

For covering unused module slots.

- Material: 1.5 mm thick sheet steel
- Color: RAL 7035 (Light Grey)
- Supplied with rack mounting hardware kit

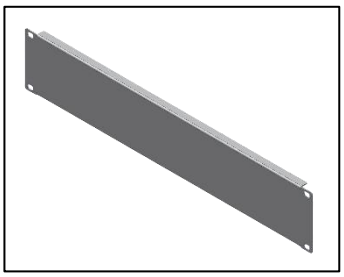

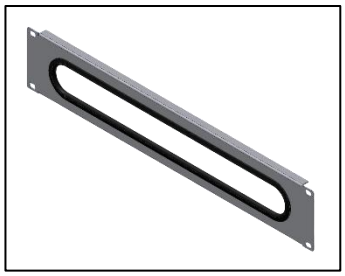

Cable Pass-Through Panels

For front-side cable management and entry.

- Material: 1.5 mm thick sheet steel
- Color: RAL 7035 (Light Grey)
- Supplied with rack mounting hardware kit

Dimensions		Order No.
Width **[B]**	*Height* **[H]**	
19"	1U	2.710.4186
19"	2U	2.710.4187

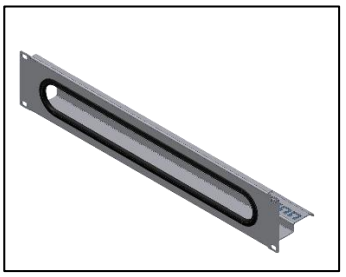

Cable Pass-Through Panels with Integrated Strain Relief

These panels enable the clean, depth-wise routing of front-side cables, ensuring organized management and effective strain relief.

- Material: 1.5 mm thick sheet steel
- Color: RAL 7035 (Light Grey)

Included Accessories:

- 10x Cable ties (100 x 2.5 mm)
- Rack mounting hardware kit

Dimensions			Order No.
Width **[B]**	*Depth* **[T]**	*Height* **[H]**	
19"	120	1U	2.718.0175
19"	120	2U	2.718.0176

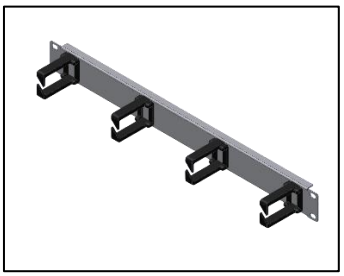

Cable Management Panels with Plastic Rings

Designed for organized cable routing.

- Material: 1.5 mm thick sheet steel
- Color: RAL 7035 (Light Grey)
- Ring Dimensions: 40 x 55 mm
- Supplied with rack mounting hardware kit

Dimensions		Order No.
Width **[B]**	*Height* **[H]**	
19"	1U	2.710.4083

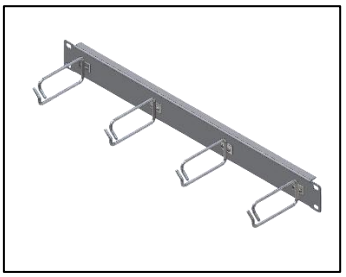

Cable Management Panels with Metal Rings

Designed for heavy-duty cable routing and organization.

- Material: 1.5 mm thick sheet steel
- Color: RAL 7035 (Light Grey)
- Ring Dimensions: 42 x 85 mm
- Supplied with rack mounting hardware kit

Dimensions		Order No.
Width **[B]**	*Height* **[H]**	
19"	1U	2.710.4082

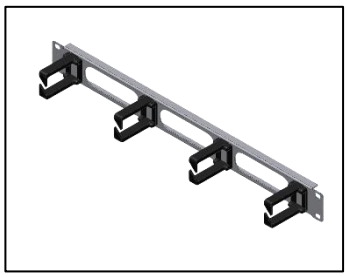

Cable Management Panels with Pass-Through Slots

Designed for the simultaneous organization and routing of cables.
Material: 1.5 mm thick sheet steel
Color: RAL 7035 (Light Grey)
Ring Dimensions:
Plastic Rings: 40 x 55 mm
Metal Rings: 42 x 85 mm
Supplied with rack mounting hardware kit

Dimensions		Notes	Order No
Width **[B]**	*Height* **[H]**		
19"	1U	With Plastic Rings	2.718.0173
19"	1U	With Metal Rings	2.718.0174

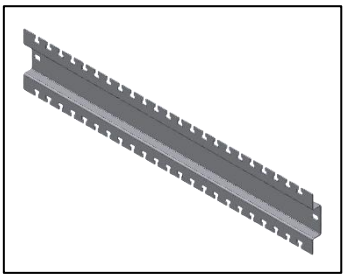

Cable Management Rail

This rail can be installed either horizontally (width-wise) or vertically (depth-wise) within standard-sized cabinets. Its application ensures organized cable routing and effective strain relief.

- Material: 1.5 mm thick sheet steel
- Color: RAL 7035 (Light Grey)

Included Accessories:

- Installation hardware kit (all necessary fasteners)
- 10x Cable ties (100 x 2.5 mm)

Dimensions			Notes	Order No.
Width **[B]**	*Depth* **[T]**	*Height* **[H]**		
19"	15	1,5U	For 19-inch rack width	2.718.0177
190	15	1,5U	For 400 mm deep cabinets	2.718.0178
390	15	1,5U	For 600 mm deep cabinets	2.718.0179
590	15	1,5U	For 800 mm deep cabinets	2.718.0180

Fixed Equipment Shelves

Designed for installation in standard-sized cabinets (with 4 pre-positioned 19" mounting rails). These shelves feature a 4-point support system and a fixed screw-on mounting. All necessary installation hardware is included.

- Material: 1.5 mm thick sheet steel
- Color: RAL 7035 (Light Grey)
- Design Options: Non-vented (solid) versions are also available upon request.

Load Capacity: 50 kg

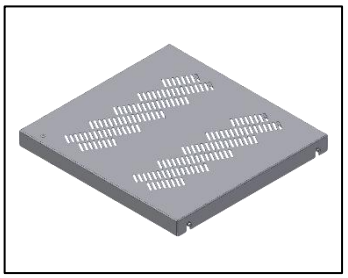

Dimensions			Notes	Order No.	
Width **[B]**	*Depth* **[T]**	*Height* **[H]**		Perforated	Non-perforated
448	235	1U	For 400 mm deep cabinets	2.710.4272	2.710.5686
448	435	1U	For 600 mm deep cabinets	2.710.4004	2.710.4224
448	635	1U	For 800 mm deep cabinets	2.710.4005	2.710.4223
448	729	1U	For 890 mm deep cabinets	2.710.4019	2.710.5687

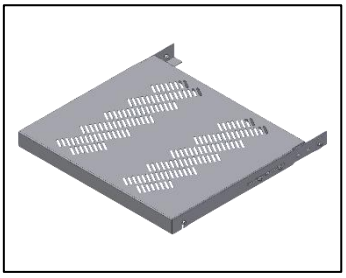

Equipment Shelves with Adjustable Depth Adapters

These depth-adjustable adapters enable secure mounting to 19-inch rails within the specified size range, accommodating various cabinet depths. All necessary installation hardware is included.

- Material: 1.5 mm thick sheet steel
- Color: RAL 7035 (Light Grey)
- Design Options: Non-vented (solid) versions are also available upon request.
- Load Capacity: 40 kg

Dimensions			Notes	Order No.	
Width **[B]**	*Depth* **[T]**	*Height* **[H]**		Perforated	Non-perforated
448	400	1U	For mounting rail distances between 340–450mm	2.710.3516	2.710.5192
448	600	1U	For mounting rail distances between 540–650 mm	2.710.4238	2.710.5711

Cantilever Shelves

The optional rear support kit can be used for cabinet depths up to 600 mm.

- Material: 1.5 mm thick sheet steel
- Color: RAL 7035 (Light Grey)
- Design Options: Non-vented (solid) versions are also available upon request.
- Load Capacity: 20 kg
- Supplied with rack mounting hardware kit

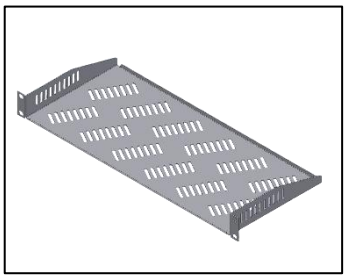

Dimensions			Notes	Order No.	
Width **[B]**	*Depth***[T]**	*Height* **[H]**		Perforated	Non-perforated
19"	250	1U		2.710.2863	2.710.2864
19"	300	1U	Supplied with Rear Support Kit	2.710.4274	2.710.4614
19"	350	1U	Supplied with Rear Support Kit	2.710.4275	2.710.4618
19"	250	2U		2.710.4276	2.710.4444
19"	300	2U	Supplied with Rear Support Kit	2.710.4277	2.710.4612
19"	400	2U	Supplied with Rear Support Kit	2.710.4278	2.710.4465

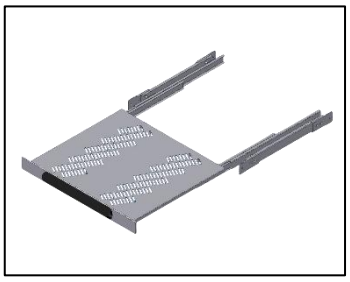

Sliding Equipment Shelves
Designed for installation in standard-sized cabinets (with 4 pre-positioned 19" mounting rails). These shelves provide easy access to equipment and are supplied with all necessary installation hardware.
- Material: 1.5 mm thick sheet steel
- Color: RAL 7035 (Light Grey)
- Design Options: Non-vented (solid) versions are also available upon request.

Load Capacity:
- 445 mm depth shelf: 40 kg
- 645 mm depth shelf: 50 kg

Dimensions			Notes	Order No.
Width **[B]**	*Depth* **[T]**	*Height* **[H]**		
448	445	1U	For 600 mm deep cabinets	2.710.4167
448	645	1U	For 800 mm deep cabinets	1.710.3303

General-Purpose Storage Drawer
Secure, lockable storage drawer for universal use. Supplied with a complete set of installation hardware.
Material: 1.5 mm thick sheet steel
Color: RAL 7035 (Light Grey)
Load Capacity: 20 kg
Compatibility: Suitable for cabinet depths of 600–800 mm and open-frame racks.

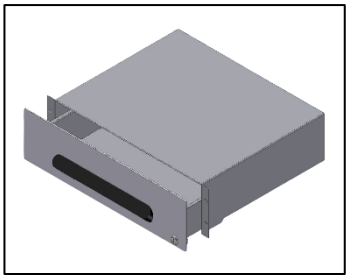

Dimensions			Order No.
Width **[B]**	*Derpth* **[T]**	*Height* **[H]**	
19"	370	3U	2.710.3029

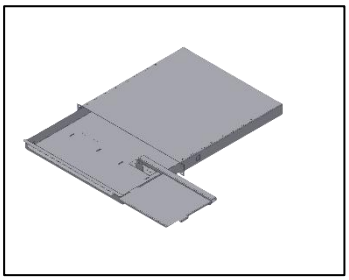

Keyboard Tray / Keyboard Drawer
Designed for installation in standard-sized cabinets (with 4 pre-positioned 19" mounting rails). These trays provide a stable and accessible platform for standard keyboards.
Material: 1.0 mm and 1.5 mm thick sheet steel
Color: RAL 7035 (Light Grey)
Depth Requirement: For installations in 800 mm deep cabinets, a dedicated rear support bracket must be ordered separately.
Security: Available in lockable versions upon request.
Supplied with rack mounting hardware kit

Dimensions			Notes	Order No.
Width **[B]**	*Depth* **[T]**	*Heiht* **[H]**		
19"	464	1U	For 600 mm deep cabinets, with integrated mouse pad	2.710.3297
19"	464	1U	For 600 mm deep cabinets, without mouse pad	2.710.3031
			Rear Support Adapter	2.710.4284

Chassis Runner / Support Rail Kit
Designed for installation in standard-sized cabinets (with 4 pre-positioned 19" mounting rails). These rails are specifically engineered to support and guide heavy-duty 19-inch equipment and chassis.
- Material: 2.0 mm thick sheet steel
- Color: RAL 7035 (Light Grey)

Kit Includes:
- 2x Support rails (left and right)
- Full installation hardware kit (all necessary fasteners for cabinet mounting)

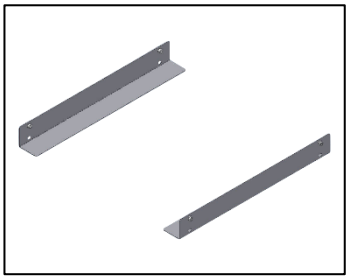

Dimensions		Notes	Order No.
Depth **[T]**	Height **[H]**		
228	1U	For 400 mm deep cabinets	2.710.4282
428	1U	For 600 mm deep cabinets	2.761.2037
628	1U	For 800 mm deep cabinets	2.761.2038

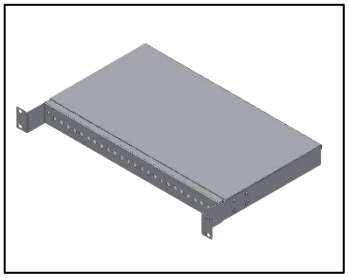

Fiber Optic Patch Panels
Designed for the termination, splicing, and organized routing of fiber optic cables.
- Material: 1.0 mm and 2.0 mm thick sheet steel
- Color: RAL 7035 (Light Grey)
- Front Panel Details: The removable (screw-on) front panels feature black silk-screened numbering below each connector cutout and labeling fields above them for easy identification.
- Included Accessories: Supplied with a rack mounting hardware kit.
- Note: Connectors (adapters) are not included.

Dimensions			Notes	Order No.
Width **[B]**	*Depth* **[T]**	*Height* **[H]**		
19"	295	1U	For 24 x ST adapters	1.704.1081
19"	295	1U	For 24 x SC adaptersFor	1.704.1098
19"	295	1U	12 x DSC (Duplex SC) adapters	1.704.1099

Fan Trays / Fan Units
Equipped with a power switch, fuse, and a 1.5 m power cable for easy integration and safety.
- Material: 1.0 mm and 1.5 mm thick sheet steel
- Color: RAL 7035 (Light Grey)
- Power Options: Also available with 48 V DC fans upon request.
- Supplied with rack mounting hardware kit

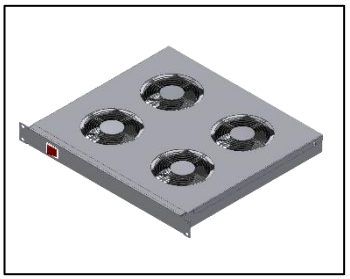

Dimensions			Notes	Order No.
Width **[B]**	*Depth* **[T]**	*Height* **[H]**		
19"	240	1U	2-fan unit	2.710.4285
19"	400	1U	2-fan unit	2.710.3101
19"	400	1U	4-fan unit	2.710.3413
19"	600	1U	6-fan unit	2.710.4307



Rack-Mountable Power Distribution Units (PDU)Type: KS 238
Rewireable Supplied with 19" mounting brackets (adapters).
Please note: rack mounting hardware kit is not included.
- Power Cable Specifications: For models equipped with a power cord, a white 3x1.5 mm^2 cable is used, featuring a grounded Schuko plug with a length of 2.5 m.
- Ratings: 250 V AC / 16 A load capacity.
- Color: RAL 7035 (Light Grey) aluminum profile with black 19" adapters and sockets.
- Customization: Available with custom cable lengths and alternative colors upon request.

Dimensions			Notes	Order No.
Width **[B]**	*Depth* **[T]**	*Height* **[H]**		
19"	46	60	7-way, with power cord	1.768.0413
19"	46	60	7-way, without power cord	1.768.0414
19"	46	60	6-way with power switch, with power cord	1.768.0415
19"	46	60	6-way with power switch, without power cord	1.768.0416

Rack-Mountable Power Distribution Units (PDU)Type: KS 240
Rewireable Supplied with 19" mounting brackets (adapters).
Please note: rack mounting hardware kit is not included.
- Power Cable Specifications: Models equipped with a power cord feature a white 3x1.5 mm^2 cable, 2.5 m in length, with a grounded Schuko plug.
- Ratings: 250 V AC / 16 A load capacity.
- Color: RAL 7035 (Light Grey) aluminum profile with black 19" adapters and sockets.
- Customization: Available with custom cable lengths and alternative colors upon request.



Dimensions			Notes	Order No.
Width **[B]**	*Depth* **[T]**	*Height* **[H]**		
19"	45	58	7-way, with power cord	1.768.0405
19"	45	58	7-way, without power cord	1.768.0406
19"	45	58	6-way with power switch, with power cord	1.768.0407
19"	45	58	6-way with power switch, without power cord	1.768.0408

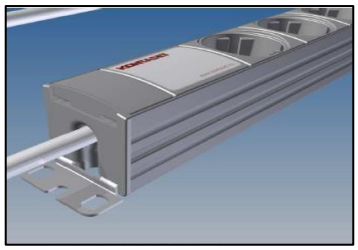

Standard installation

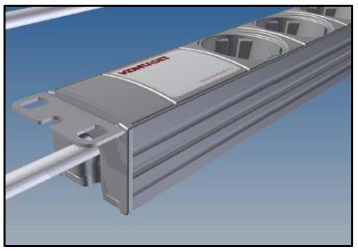

For 19-inch rack mounting

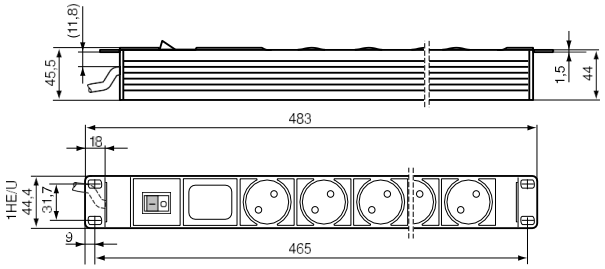

With compact power switch, standard end caps, and 19” mounting brackets



Non-Rewireable Rack-Mountable Power Distribution Units (PDU)Type: Di-strip

High-quality, pre-wired distribution units designed for 19-inch rack integration. These units feature a slim profile and a variety of color-coded housing options.

Technical Specifications:

- Metal chassis available in standard Grey (1), Turquoise (4), or Orange (6). Plastic components are grey.
- Power Cord: Equipped with a white 3x1.5 mm^2 cable (2.5 m length) and a grounded Schuko plug.
- Ratings: General: 250 V AC / 16 A load capacity. IEC 320 sockets: 10 A max.
- Dimensions: Width: 1U (44.4 mm) Mounting Depth: 44 mm
- Socket Pitch: 50 mm (distance between centers)
- Mounting: 19” mounting brackets are included, designed to slide into the standard end caps.
- Ordering Information: Please specify the housing color by the last digit of the order number. Custom cable lengths are available upon request.

	Type		Order No.	x Colour
	**Compact** *(switch!)*	6	3.302.006 x	
	**Compact** *(without switch)*	7	3.300.007 x	
	**Protector FI** *(RCD)*	5	3.304.005 x	
	**Protector LS** *(MCB)*	5	3.308.005 x	
	**Protector FI/LS** *(RCBO)*	5	3.310.005 x	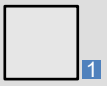 1
	**Power Cleaner** (mains interference filter)	5	3.312.005 x	
	**Master Slave**	5	3.314.005 x	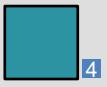 4
	**Safety Basic** (*surge protection*)	6	3.316.006 x	
	**Safety Standard** *(combined surge protection and EMI/RFI Filter)*	5	3.318.005 x	 6
	**Protector NOT-AUS** *(Emergency Stop))*	6	3.326.006 x	
	**IEC 320** *(cabled with switch)*	9	3.602.009 1	
	**IEC 320** *(inlet in the connection field)*	9	3.622.009 1	



The rack frames are constructed from 2.0 mm thick, precision-bent, and welded sheet steel. Their modular design allows for configurations using various height units (2U, 9U, 18U), all featuring standard 19-inch mounting holes. Modular Construction: The racks are assembled by bolting together the aforementioned height modules to reach the desired capacity. Stability & Leveling: Exceptional stability is provided by a heavy-duty base unit equipped with leveling feet, allowing for precise adjustment on uneven floor surfaces. Adjustable Depth: The 19-inch vertical frame can be repositioned along the base in the depth direction, providing flexibility for various equipment types. Mobility Option: For mobile applications, the leveling feet can be replaced with a heavy-duty caster set, consisting of two swivel casters and two braked (locking) casters for easy maneuverability and secure positioning.

Technical Data Table

Order No.	Dimensions				Weight *[kg]*
	H1	**H**	**B**	**T**	
1.710.3286	11U	635	554	700	20
1.710.3285	20U	1035	554	700	22
1.710.3284	27U	1345	554	700	25
1.710.3283	36U	1750	554	700	29

1U = 1¾" = 44,45 mm • 19" = 482,6 mm

Customization & Standard

In addition to our standard catalog models, the racks can be ordered with the following custom specifications:
Custom Heights: Available in various height dimensions beyond the standard range.
Metric Standards: Can be manufactured with metric pitch hole patterns in accordance with the ETS 300.119 standard.
Custom Finishes: Available in alternative colors and finishes (beyond the standard RAL 7035).

Color: Light Grey (RAL 7035)Shipping Condition: Delivered flat-packed (knock-down), including all necessary fasteners (assembly hardware).
Documentation: Comprehensive assembly instructions included.

Optional Accessories (Ordered Separately)
- Caster Set Includes 2 swivel and 2 braked wheels 2.710.2926
- Desktop / Work Surface Integrated tabletop for rack units 2.710.2986 600x800mm

Integrated Workstation Solutions

By combining the desktop with the rack frame, a clean and practical workstation can be created. The desktop is easily secured to the rack using the included screws. Optimized Configurations: For the best ergonomic results, we recommend using 11U or 20U height racks with the desktop unit. Color: Available in Light Grey (RAL 7035).





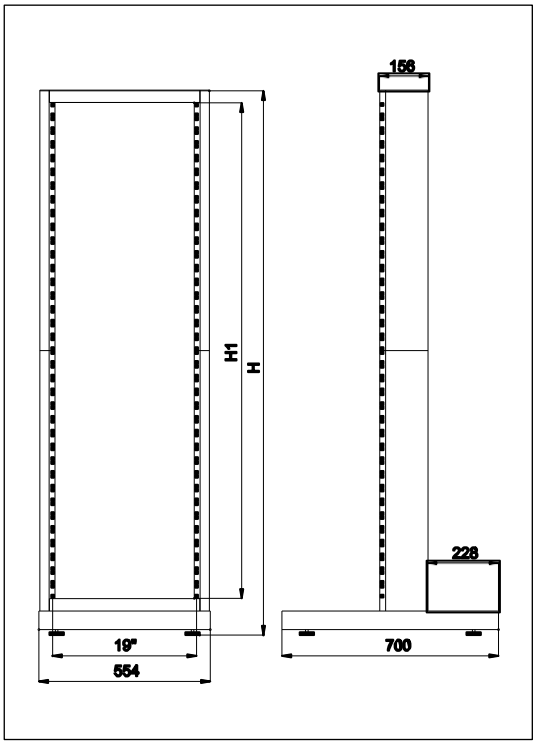



53U Cabinet

Optional Components (Ordered Separately)

- 2.715.2102 Welded Shelf (Heavy-Duty)
- 2.715.2127 Welded Mounting Bracket / Support Angle
- 5.760.1463 Cable Management Ring / Cable Retaining Ring

Battery Cell Storage Cabinet
Specifically engineered for the secure storage and mounting of battery cells, this specialized cabinet features precision-fitted shelves and brackets tailored to cell dimensions, ensuring a stable and organized layout.

Key Features & Design:
Integrated Cable Management: The vertical mounting rails are equipped with cable management rings to facilitate neat and structured wiring.
Seamless Interconnectivity: Side panel cutouts allow for easy cable pass-through, enabling the electrical interconnection of multiple cabinets placed side-by-side (daisy-chaining).
Enhanced Stability: Specialized wall-mounting brackets are located on the top of the unit, allowing the cabinet to be securely anchored to the wall for maximum safety.

Primary Functions of the Rack:
Structural Integrity: Provides a robust, heavy-duty framework for high-density battery loads.
Environmental Protection: Shields cells against mechanical damage, dust, and moisture.
Maintenance-Friendly Design: Ensures a clean, organized layout for easy inspection and service.

Technical Advantages:
Modular Scalability: The modular architecture accommodates various battery sizes and capacities.
Thermal Management: Optimized for efficient heat dissipation, preventing thermal runaway and ensuring system safety.
Extended Service Life: By maintaining ideal operating conditions, the cabinet helps prolong the lifespan of the battery system.

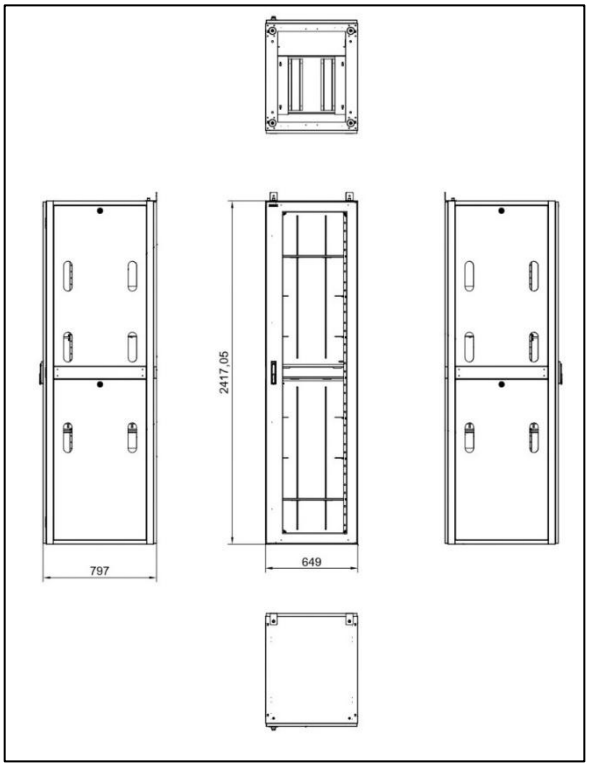



22 U Cabinet

Technical Data Table			
Order No	Dimensions		
	H	B	T
1.715.0103	22U	800	650
1.715.0102	40U	800	650
1.715.0099	53U	800	650

Outdoor Enclosure Solutions
Our product range includes both standardized models and fully customized outdoor cabinets designed to meet specific customer requirements.

Materials & Surface Treatment:
Material Options: High-quality configurations available in powder-coated steel, aluminum, and stainless steel.
Finish: All units feature a weather-resistant finish available in a wide range of RAL colors, ensuring long-term durability in outdoor environments.
Sealing Technology: As a standard, we utilize self-adhesive sealing profiles for doors. For enhanced protection, Formed-In-Place Foam Gaskets (FIPFG) / injection-molded foam seals are available upon request.

Design & Protection:
Modular Architecture: Thanks to their modular design, these cabinets are available in various sizes and internal layouts, making them easily adaptable to diverse fields of application.
Environmental Resistance: High mechanical impact resistance (IK rating) and superior IP protection levels ensure reliable shielding for internal equipment against dust, moisture, and harsh environmental conditions.

Customization & Accessories:
To ensure full compatibility with your specific application, we offer a comprehensive range of accessories:
Climate Control: Ventilation units, air filters, and heating elements.
Internal Mounting: Shelves, mounting plates, and specialized rail systems.

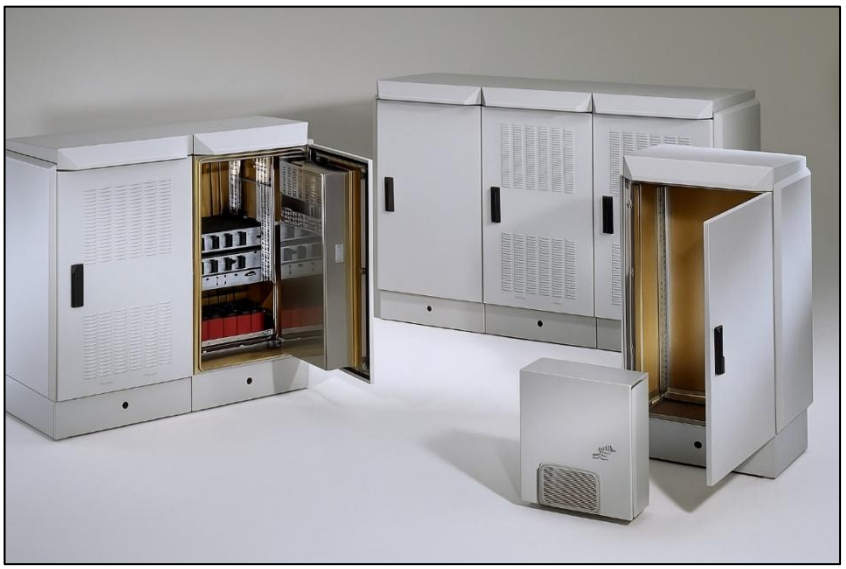





Outdoor Wall-Mounted Enclosures

Order No: 17097802/3

Geometric Dimensions
Width: 19” / 600 mm
Depth:
Usable mounting depth: 400 mm
Overall external depth: 446 mm
Height:
Usable mounting height: 10U
Overall external height: 620 mm

Structural Design
The cabinet features a double-walled aluminum construction, designed for maximum environmental protection and thermal management.
Materials: Outer casing made of 1.5 mm aluminum; inner sealed section constructed from 2.0 mm aluminum sheet.
Door System: Double-walled door equipped with a 3-point locking mechanism and a swing handle compatible with half-cylinder lock cores.
Sealing & Ventilation: Sealed with Terostat material. The door includes a specialized filtered air intake.
Panel Construction: Side and rear panels are precision-bent and feature tamper-proof external fasteners for enhanced security.
Thermal Exhaust: Warm air is expelled through upper and lower perforations via a roof-mounted extraction fan.
The welded roof element is secured with internal bolts, accessible only when the door is open.
Internal Mounting: 19” vertical mounting rails are depth-adjustable in 20 mm increments to suit specific equipment requirements.
Surface Treatment: All visible surfaces are finished with RAL 7035 electrostatic powder coating, optimized for outdoor durability and aesthetics.

Installed Components & Technical Data
- Mounting Rails: 2x2 pcs, 10U high, stainless steel 19” rails
- Door Sensor: Magnetic Reed-switch solution
- Heating Unit150W fan-assisted heater with adjustable thermostat (230 V AC)
- Cable Entry: 10x Pg9 plastic cable glands at the base (customizable quantity/size)
- Earthing: (EPH)6x6 mm E-Cu copper busbar with 10 connection points (left side)
- Wall Mounting: Bracket hole spacing: 550 mm (horizontal) x 490 mm (vertical)
- Protection Rating: IP54 (Dust and splash-proof)

Ventilation Panel (Roof-Mounted)Fan Type:
Thermostat-controlled ebm-papst RG 160-28 radial fan
Airflow: 202 m^3/h
Power Consumption: 47 W
Circuit Protection: 1x4 A requirement
Noise Level: 55 dB

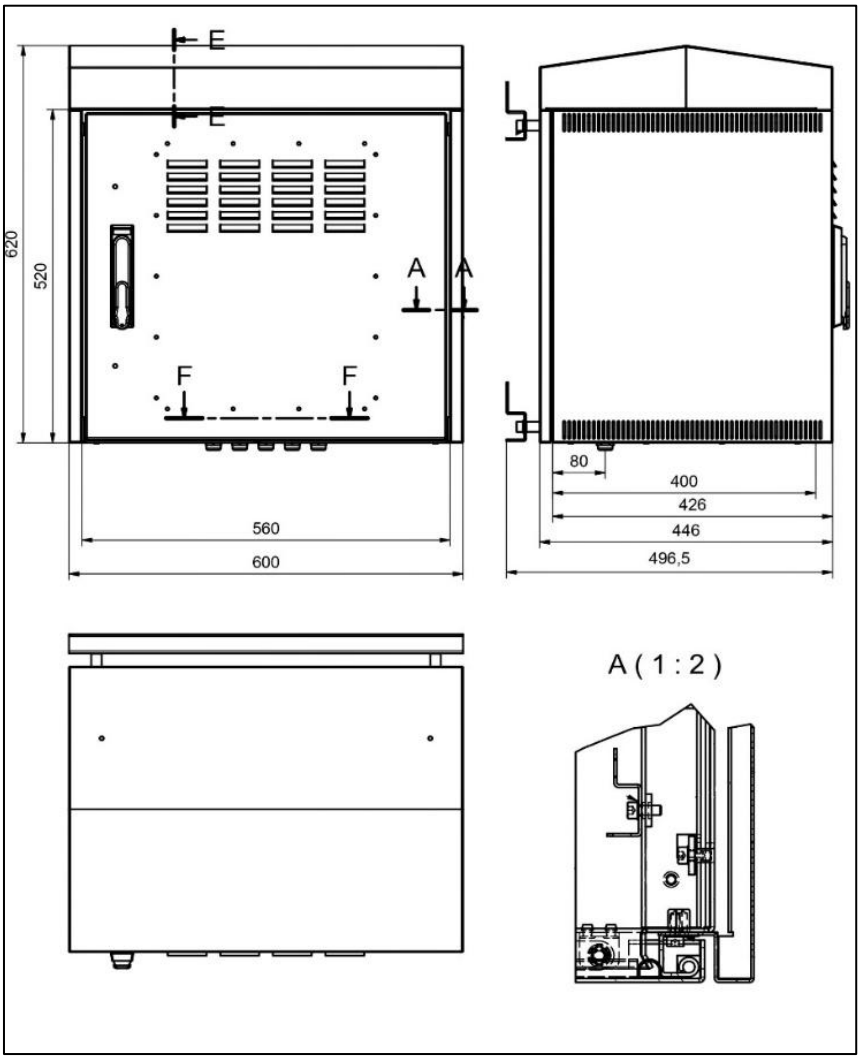
E
E
620
520
A
A
F
F
560
600
80
400
426
446
496,5
A (1 : 2)

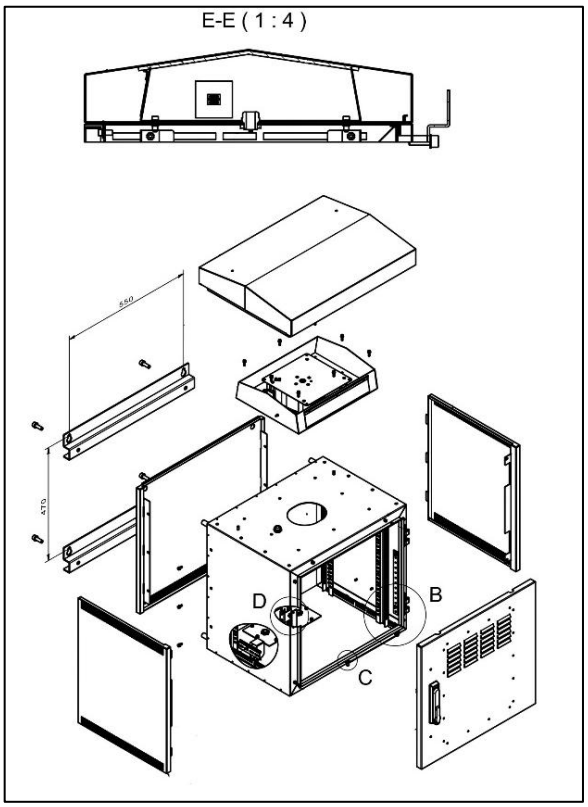
E-E (1 : 4)
D
B
C

Air-Conditioned Outdoor Enclosure Part Number / Drawing No.: 1.709.7830





Geometric Dimensions
•Overall Dimensions: Width 700 mm / Depth 870 mm / Height 2170 mm (including lifting frame).
•Lifting Frame Height: 100 mm (standard configuration).
•Mounting Width: Standard 19” (convertible to 21” using existing components).
•Internal Configuration: 2x2 depth-adjustable 19” mounting rails.
•Cable Management Space: 100 mm lateral clearance (for 19” setups).
•Usable Mounting Capacity: 40U (1778.00 mm).
•Usable Internal Depth: 600 mm.

Structural Design
Framework: Built on a high-strength aluminum chassis.
Casing: Double-walled construction with 1.5 mm and 2.0 mm aluminum panels.
Surface Treatment: Weather-resistant electrostatic powder coating.
Base: Corrosion-resistant steel plinth/base at the bottom.
Protection Rating: IP54.Grounding: All accessible surfaces are connected to the central earthing point via 2.5 mm^2 grounding cables.

Door System
•Mounting: Secured with four heavy-duty hinges.
•Locking: 3-point locking system with a swing handle compatible with half-cylinder lock cores (key included).
•Functionality: 110° opening angle with an integrated door stay/stop
•Security: Equipped with a built-in magnetic Reed-switch door opening sensor.

Climate Control (Heating & Cooling)
The unit is equipped with a Stulz Predator climate control system:
•Cooling Capacity: 1000 W
•Heating Capacity: 600 W
•Emergency Ventilation: Supported.
•Power Requirements:
- 48V DC for the climate unit (to be provided by the customer).
- 230V AC internal wiring from the terminal block to the equipment is included in the construction.

•Interface: Units are equipped with an integrated control unit/keypad.

Cable Entry
Location: Positioned at the bottom rear of the cabinet.
Hardware: Equipped with metallic Pg. cable glands for superior durability and shielding.

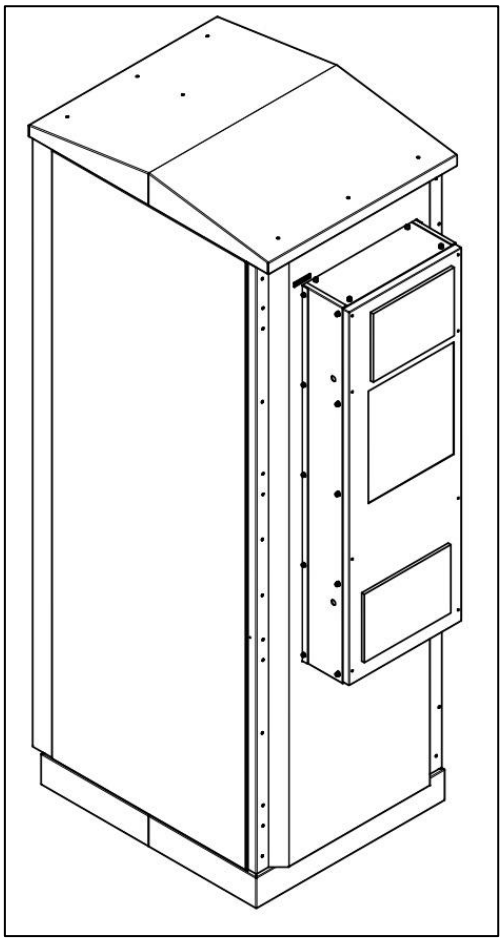

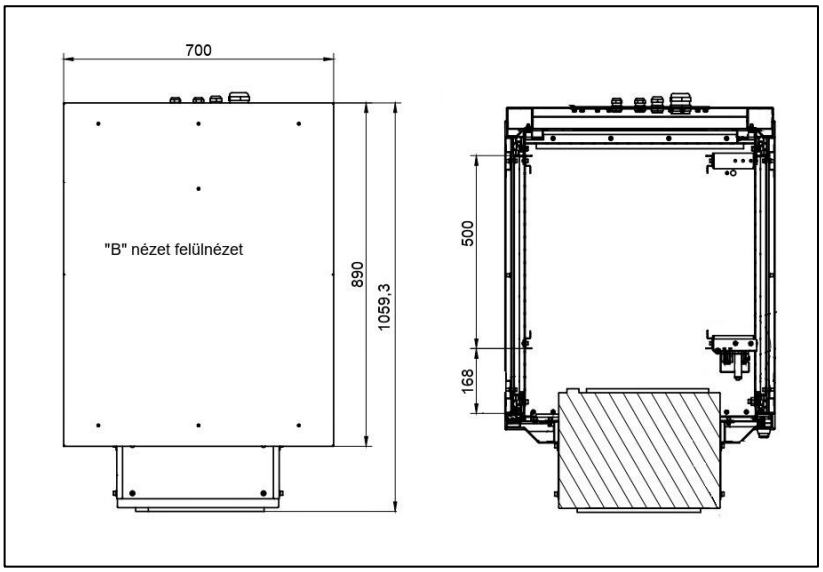
700
"B" nézet felülnézet
890
1059,3
500
168

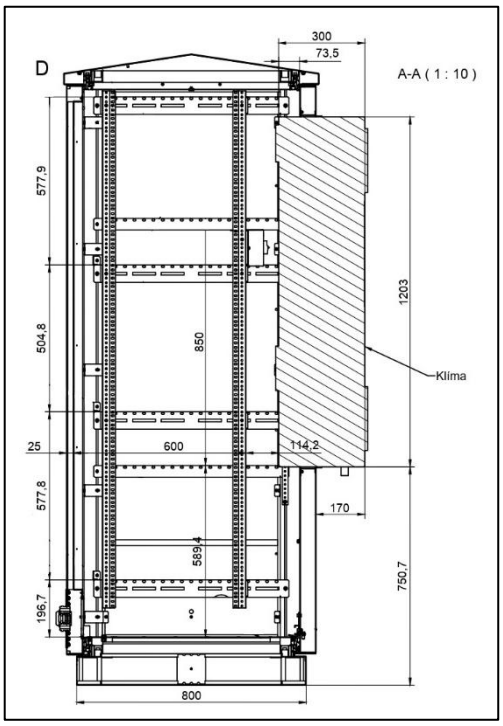
D
300
73,5
A-A (1 : 10)
577,9
504,8
850
1203
Klíma
25
600
114,2
577,8
170
589
750,7
196,7
800

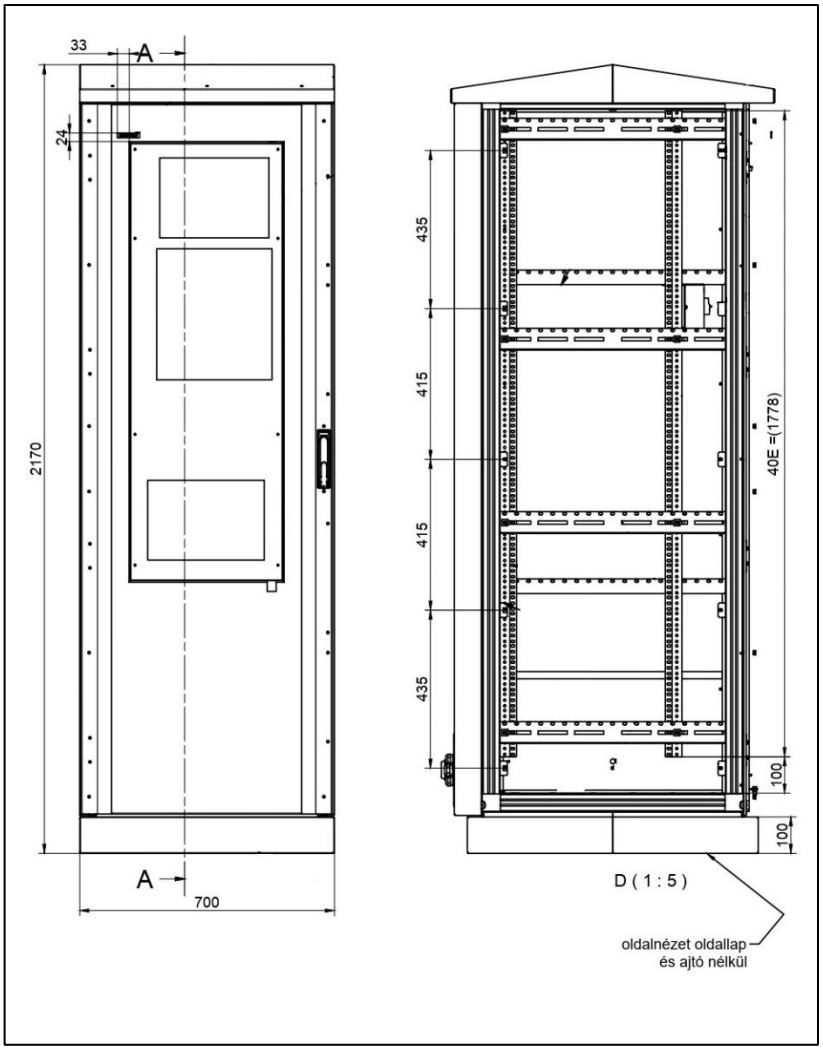
33
A
24
2170
A
700
435
415
415
435
40E =(1778)
100
100
D (1 : 5)
oldalnézet oldallap
és ajtó nélkül

Customized Manufacturing & Engineering

We thrive on unique technical challenges. Whether it's modifying our standard series or designing and manufacturing entirely bespoke solutions, we tailor every product to your specific operational requirements.

Engineering Excellence: With over 30 years of specialized design and manufacturing experience, we possess the deep technical know-how required to turn your concepts into reality.

Rapid Prototyping & Execution: Our streamlined processes ensure that your custom ideas are developed and implemented quickly and efficiently.

Flexibility: From minor adjustments of existing models to complex, ground-up hardware engineering, we are your partner in innovation.

Technical Furniture & Control Consoles

Our bespoke console solutions are engineered to meet the highest operational demands, providing a professional environment for mission-critical control rooms.

Customized Ergonomic Design: Every unit is tailored to specific operator needs, ensuring comfort and efficiency during long shifts.

Heavy-Duty Construction: Built on a robust, **high-load capacity steel framework** for maximum durability and stability.

Integrated Connectivity: Supports the installation of **recessed and concealed power/data connectors** to maintain a clean, cable-free workspace.

Advanced Monitor Support: Available with **single or dual-tier monitor mounting systems**, specifically designed to accommodate 19" equipment and various display configurations.

